eXtreme Pipe Cleaning Machine

Operation and Maintenance Manual

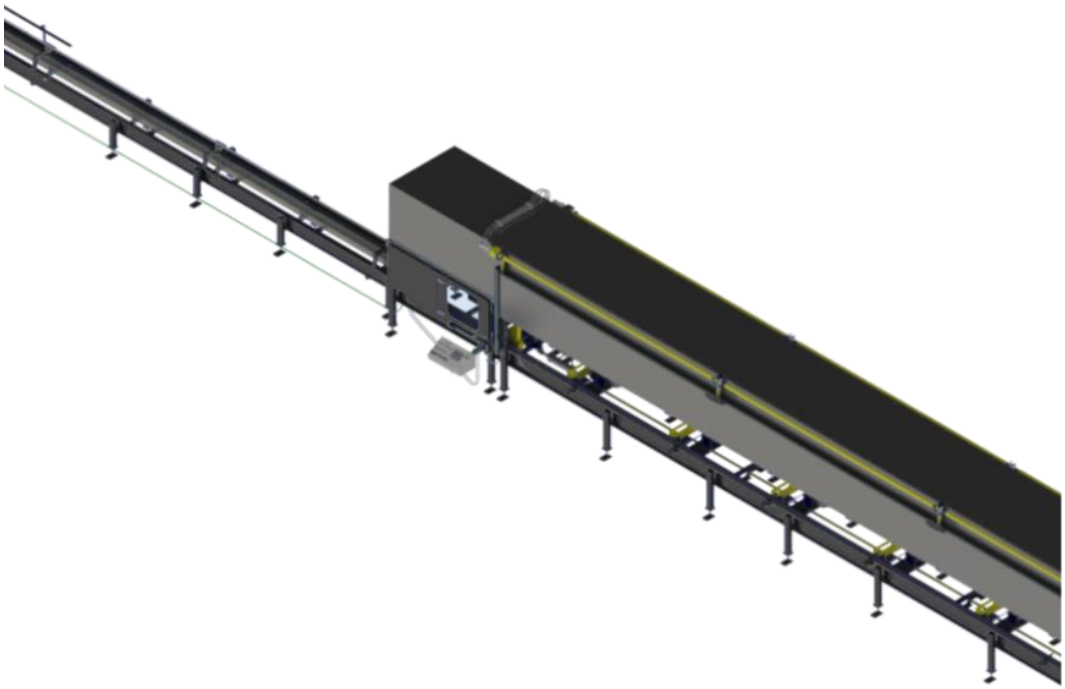

Hub City Iron Works
700 E Texas Ave.
Rayne, LA 70578
Phone: (337) 334-6969
Fax: (337) 365-6565
www.hubcityironworks.com

Customer:	
Location:	
Job #:	
Local Rep:	
Rep Phone #	
Document #	

Table of Contents

Introduction 3
Safety 3
Machine Specifications 4
- Standard Features 4
- Optional Features 4
- Specifications 4

Pipe Plant Requirements 4
Machine Setup 5
Operation 7
- Start up 7
- Setup 7
- Process 7

Troubleshooting 9
Preventative Maintenance Procedure 10
Parts List 12
- OD Brush Assembly 13
- OD Motor Mount 14
- Drive Roller Assembly 17
- Load/Unload Paddle Assembly 18
- Back Plate Linear Bearing 19
- Lance Drive Cart 20

Hose Schedule 23
Recommended Spare Parts 25
Hydraulic & Pneumatic Schematic 26

Service
Call: 337.334.6969
Email: servicerequest@hubcityironworks.com

Spare Parts
Call: 337.334.6969
Visit: www.hubcityironworks.com

Sales
Call: 337.334.6969
Email: sales@hubcityironworks.com

Introduction

Hub city Iron Works' XPCM is a next generation tubular cleaning machine that tremendously increases the performance, quality and capability of traditional cleaning processes. Its innovative design features motorized OD and ID cleaning carts that linearly traverse the pipe during the cleaning operation. Available with both dry brush and water blast options and the ability to process up to 20" pipe, the XPCM is the clear front runner in its field.

Safety

Hub City has provided operating procedures and safety information to ensure the wellbeing of both the operator and the equipment.

This operating manual contains important safety information - please read it thoroughly.

Safety Features Include:

- Mechanically active components are painted a high visibility yellow.
- Low oil level indicator protects machinery in the case of a hydraulic line rupture and limits environmental impact.
- Low voltage operator interface (24vdc).
- Electronic sensors to prevent improper use.
- Equipment safety labels.

Machine Specifications

Standard Features

- Wire Brushes for outside diameter cleaning
- "Floating" Brush System to accommodate upsets
- Cleaning head adjustments for various OD's
- ID cleaning lance
- Adjustable rotation speed
- Adjustable OD and ID cart linear speed
- Dual pump hydraulic power supply
- Hydraulic load/unload paddles
- Left or Right hand pipe loading configurations

Optional Features

- Water blasting: OD and ID options
- Reel lance: Wet and Dry options (Reduces footprint)
- Range 3 pipe capability
- Dust collection system
- OD Descaler
- Pipe Preloader
- Automated operation
- Enclosure
- Operator control booth

Specifications

- Pipe capacity:

Option	Min Tube OD	Max Tube OD
XPCM-10	2-3/8"	10"
XPCM-20	2-3/8"	20"

- Width 85"
- Height 13'
- Weight 17,000-30,000 lbs

Pipe Plant Requirements

- Electrical: 220/480V, 3-Phase, 60 Hz
- Compressed Air: 100 PSI @ 150 CFM (Dry Lance)
  100 PSI @ 10 CFM (Wet Lance)
- Rack Height: 36"-48"

Machine Setup

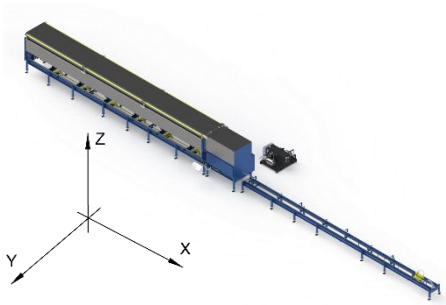

For proper operation, the machine must be installed straight and coplanar horizontally level. It is highly recommended that a Hub City technician be present during installation.

1. Layout and mark centerline of XPCM main frame and lance according to facility layout. Markings should be perpendicular to pipe racks within 3 degrees.
2. Position XPCM main frame in place.
3. Align the main frame in the X & Y direction. Alignment tolerances for the X & Y directions are $\pm$ 1/8" as measured from the axial center line at the component joints and perpendicular to the pipe racks.
4. Anchor the legs to the foundation and torque bolts between 150-200 ft-lbs.
5. Level the machine in the Z direction. To do this, use the pipe racks as a reference and set machine so that the top of the pipe racks is at the same elevation as the bridge plate on the XPCM frame.
6. Verify that the machine is in tolerance along the X and y axis, within the elevation tolerance between the bridge plate and pipe racks and that the bridge plates are also level.
7. Repeat steps 2, 3, 4 & 6 with the lance frame. Verify the top of the lance frame is level.
8. Tighten the main frame and lance frame connector bolts without disturbing the alignment.
9. Proceed with electrical and hydraulic installation.

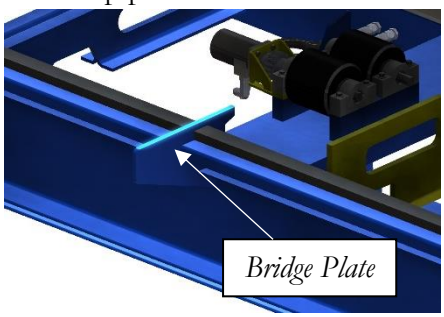

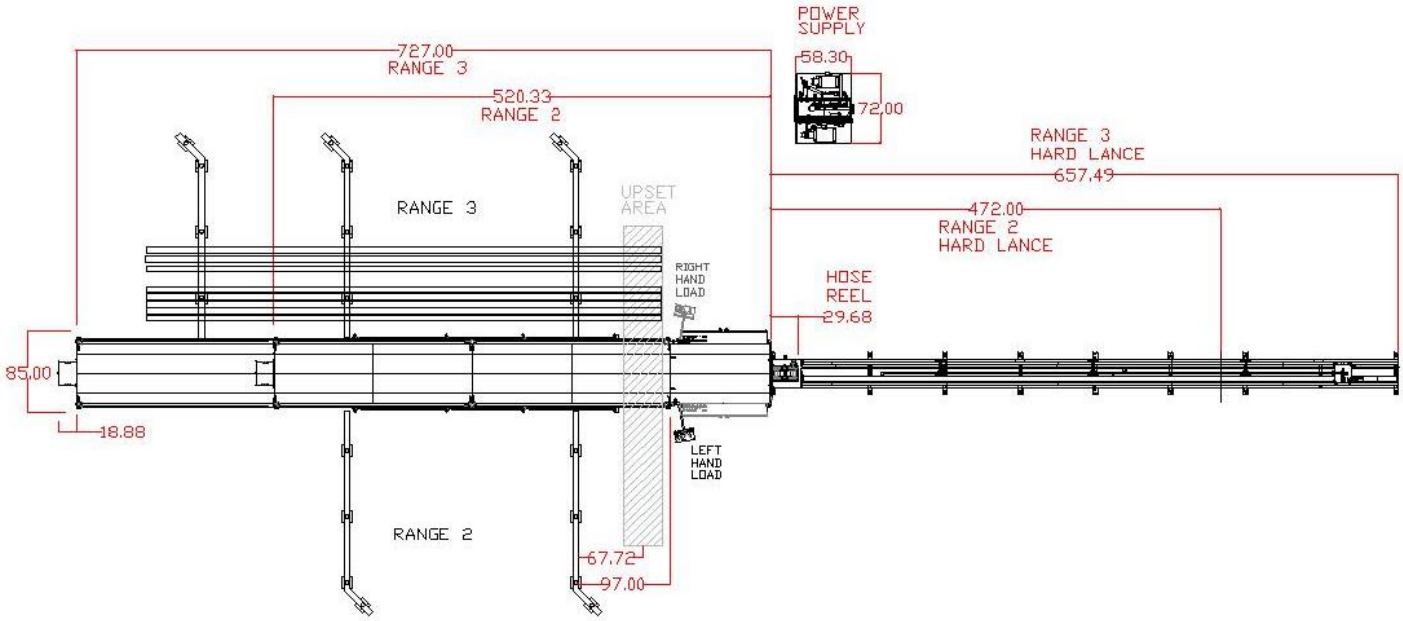

Controls

Standard XPCM Layout

(Actual control panel vary slightly.)

	Function		Function
1	Machine on light	15	Pipe rotation speed adjustment knob
2	Low oil light	16	Brush housing elevation adjustment knob
3	Camera display screen	17	Range 2/Range 3 selection switch
4	Pump #1 on light	18	OD car motion / load / unload joystick
5	Pump #2 on light	19	ID car motion joystick
6	Emergency stop button	20	Pipe rotation switch
7	Stop button	21	Brush #1 engage joystick
8	Start button	22	Brush #2 engage joystick
9	OD brush switch	23	Door control joystick
10	Lights switch	24	Preloader #1 joystick
11	ID pump switch	25	Preloader #2 joystick
12	OD pump switch	26	Loader joystick
13	OD car speed adjustment knob	27	ID water switch
14	ID car speed adjustment knob	28	OD water switch

Operation

Reference control panel layout for button numbering

Start up

1. Ensure that it is safe to operate machinery and all personnel are clear.
2. Perform daily maintenance.
3. Press start button (Control #8).
4. Warm up machine for 15 minutes.
    a. Turn OD brushes on (Control #10).
    b. Turn pipe rotation on (Control #20).
    c. Move OD & ID cart back (Control #18 & 19) and forth 3 cycles to ensure correct operation.

Setup

1. Adjust pipe rotation stations to appropriate spacing (XPCM-20 only)
    a. Pipe should sit on top 1/3 of wheel
    b. Ensure that all wheels are set to the same distance
    c. Recommended roller spacing:

Pipe/Casing OD	Roller Spacing (Center to Center)
2-3/8" to 10"	6.5"
10" to 15"	10.0"
15" to 20"	13.5"
20"	17.0"

2. Load joint of pipe by pressing and holding the load/unload joystick (Control #18) up.
3. Lower paddles to set down pipe onto rollers with load/unload joystick (Control #18) down.
4. Move OD cart over pipe (Control #18)
    a. Set OD brush height
        - Turn pipe rotation (Control #20) ON
        - Engage brush #1 and #2 by moving the joysticks down (Control #21 &22)
        - Adjust rear brush switch (Control #16) to proper height
        - When engaged, the brushes should be angled down slightly (2-3°).
        - Ensure all sensors and nozzle spray bars are clear
5. Move ID Cart (Control #19) so that the lance tip is near the pipe
    a. Adjust elevation so that the lance penetrates the pipe without hitting threads or shoulder and return to home position

Process

1. Move Unload joystick (Control #18) up and hold, then manually roll pipe in place
2. Move load joystick (Control #18) down to load pipe
3. Move ID car Joystick to FWD (Control #19)
    a. Move ID clean Joystick (Control #27) down as the lance enters pipe
4. Control desired linear speed (Control #14), stop lance at Box connection to ensure effective cleaning
5. Move OD cart Joystick to the FWD (Control #18)
    a. Move Water OD Joystick (Control #28) down as it moves over pipe
    b. Stop OD water blast at pin connection to ensure effective cleaning
6. Move Brush #1 Joystick down (Control #21) as it move over pipe
7. Move Brush #2 Joystick down (Control #22) as it move over pipe

8. If for any reason OD cart is stopped or pipe disengages brushes from cleaning:
9. Return OD & ID cart by move joystick to their home stations (Controls #18 & #19)
    a. Carts will stop automatically on the return trip
10. Move Unload joystick up to unload pipe and manually roll next pipe in place (Control #18)

Troubleshooting

- OD Cart will not move
  - Ensure rails are free of debris
  - Check full engagement of rack and pinion gear
- ID cart will not move
  - Load/Unload bridge arms not in upright position
  - Check full engagement of chain and sprockets
- Pipe paddles will not operate
  - OD or ID cart not in home position
  - Pipe bridges not fully down
- Pipe not loading and falling off wheels
  - Wheels not adjusted out enough
- Pipe not unloading
  - Paddle wear tab needs to be replaced
  - Tool joint on paddle
- OD cart gear slipping
  - Ensure rack is clear of debris
  - Ensure compression springs on motor bracket are tight
- Load/unload bridges not moving
  - OD or ID cart not in home position

Preventative Maintenance Procedure

XPCM Daily Preventative Maintenance

Company:
Location:
Machine No.:
Week of:

Instructions:
Inspect each item at the start of each shift - initial next to block after task is complete
For more detailed information consult operators manual.

Day	**Inspect wheel station** (1)rollers for wear (2)bearings for loose or missing bolts (3) grease bearings (4)drive motors for leaks and loose fittings	**Inspect doors** (1)Cracks and loose or missing bolts (2)Straps and drums for wear and loose or missing parts (3)Guide rollers for wear (4)Grease bearings	**Inspect all paddles** (1)Wear pads for wear and loose or missing bolts (2)Bearings for loose or missing bolts: grease bearings (3)Draglinks for wear and loose bolts	**Inspect brush housing** (1)Brush shafts for excess vibration (2)Bearings for loose or missing bolts: grease bearings	**Inspect hydraulic/pneumatics** (1)Check for oil/air leaks and loose fittings (2) Check for worn hoses	**Inspect all sensors** (1)for loose connections and clean sensors	**Inspect control head** (1)Check all controls for proper functionality	**Inspect power supply** (1)Check for loose fittings, leaks, and broken gages (2) Check return filter contaminant level	
1									
2									
3									
4									
5									
6									
7									

Comments:

XPCM Yearly Preventative Maintenance

Company:
Location:
Machine No.:
Week of:

For more detailed information consult operators manual.

Year	**Power Supply** (1) Drain hydraulic reservoir & clean w/ suitable solvent. (2) Remove suction strainer & clean w/ solvent (3) Change hydraulic filters (4) Check low oil switch function	**Machine Alignment** (1) Verify machine is aligned properly. Correct if necessary							

Comments:

Maintenance Diagrams

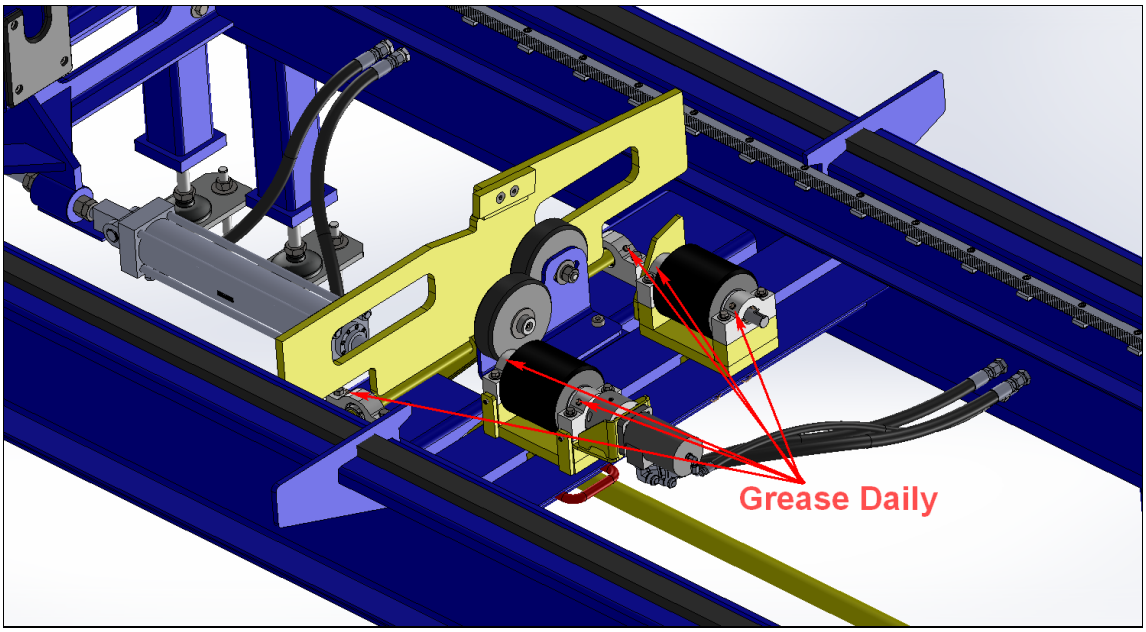

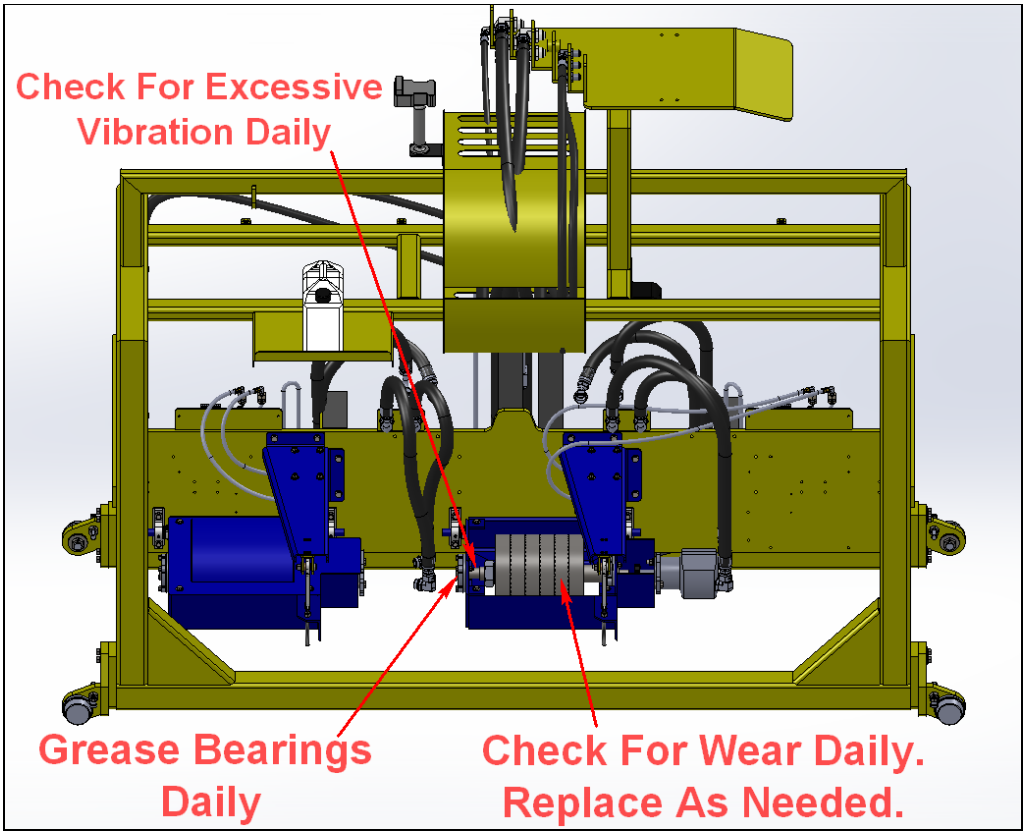

Parts List

OD Brush Assembly

Revision: B

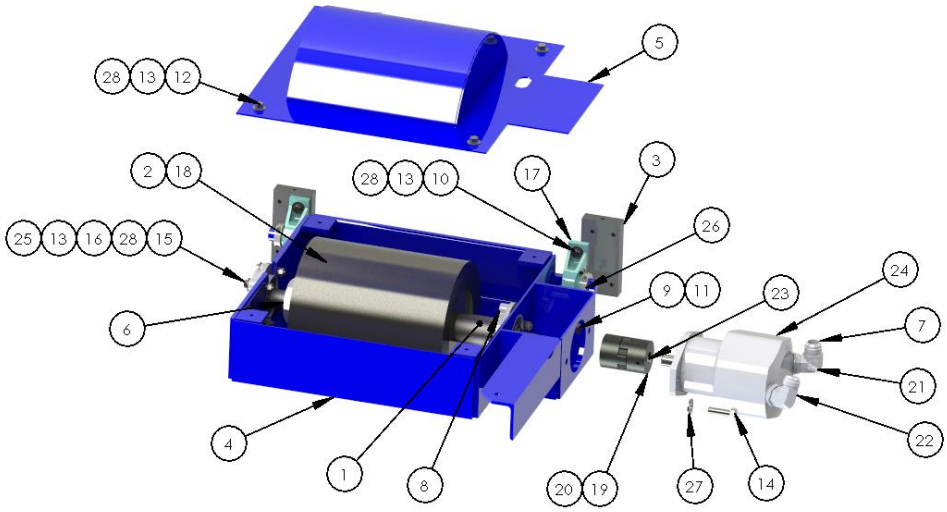

Item #	Part #	Description	Quantity
1	13909	BRUSH SHAFT	1
2	13915	BRUSH SPACER	5
3	13570	BEARING MOUNT	2
4	16016	BRUSH HOUSING MACHINE WORK	1
5	13651	BRUSH HOUSING COVER	1
6	14680	BRUSH SHAFT NUT	1
7	15742	DRILL & TAP 15595	1
8	14589	CUT BRUSH SHAFT BEARING	1
9	14124	NUT, HEX, .5" NC	2
10	14132	BOLT, HHCS, .375" X 1" NC GR5	4
11	14140	WASHER, LOCK, .50"	2
12	14144	HHCS, .375" x .75" NC	4
13	14145	WASHER, LOCK, .375"	14
14	14311	BOLT, HHCS, .50" X 1.75" NC GR5	2
15	14321	BOLT, HHCS, .375" X 2" NC GR5	6
16	14588	BRUSH SHAFT BEARING	1
17	14613	BEARING SEALMASTER, NP-16C	2
18	48129	WIRE BRUSH	5
19	15012	7/8" ID SPIDER COUPLING HALF	2
20	15027	L099NP BUNA-N SPIDER	1
21	15580	# 2 MNPT X # 4 MJIC 45 EL, (2023-2-4)	1
22	15595	# 16 MSAE X # 16 MJIC 90º ELBOW	1
23	16298	1/4" x 1-1/4" KEY	2
24	16383	BRUSH MOTOR	1
25	16487	NUT, HEX, .375" NC	6
26	16772	SPLIT COLLAR 1" BORE	2
27	17649	WASHER, FLAT, .50"	2

OD Brush Lift Assembly

Revision: A

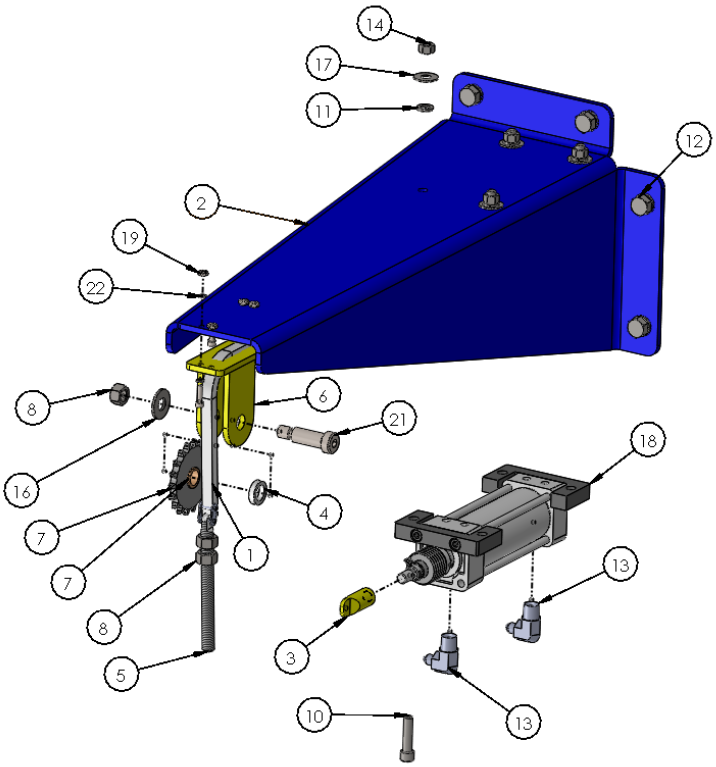

Item #	Part #	Description	Quantity
1	38283	#40 CHAIN, REF. 20" LG.	1
2	44237	AIR CYLINDER MOUNT	1
3	45497	BRUSH CHAIN CONNECTOR	1
4	45499	SPROCKET SPACER	1
5	45496	CHAIN ADJUSTMENT SCREW	1
6	45498	#40 CHAIN SPROCKET BRACKET	1
7	117-701-916-00	BRUSH LIFT SPROCKET	1
8	14124	NUT, HEX, .5" NC	3
9	14140	WASHER, LOCK, .50"	4
10	14143	BOLT, SHCS .375" x 1.5" NC	4
11	14145	WASHER, LOCK, .375"	4
12	14358	BOLT, HHCS, .50" X 1" NC GR5	4
13	15582	3/8" MP X 1/4" MJIC 90 DEG (2024-6-4)	2
14	16487	NUT, HEX, .375" NC	4
15	16756	#40 ROLLER CHAIN CONNECTING LINK	2
16	17649	WASHER, FLAT, .50"	1
17	17656	WASHER, FLAT, .375"	4
18	28310	CYLINDER, AIR	1
19	29137	NUT, HEX 10-24 SS	4
20	36721	BOLT, SHCS, 10-24 x 3/4 SS	4
21	45396	BOLT, SHOULDER, .625" X 1.50" X .5-13	1
22	14145	WASHER, LOCK .375	8

Cart Air Control Box

Revision: A

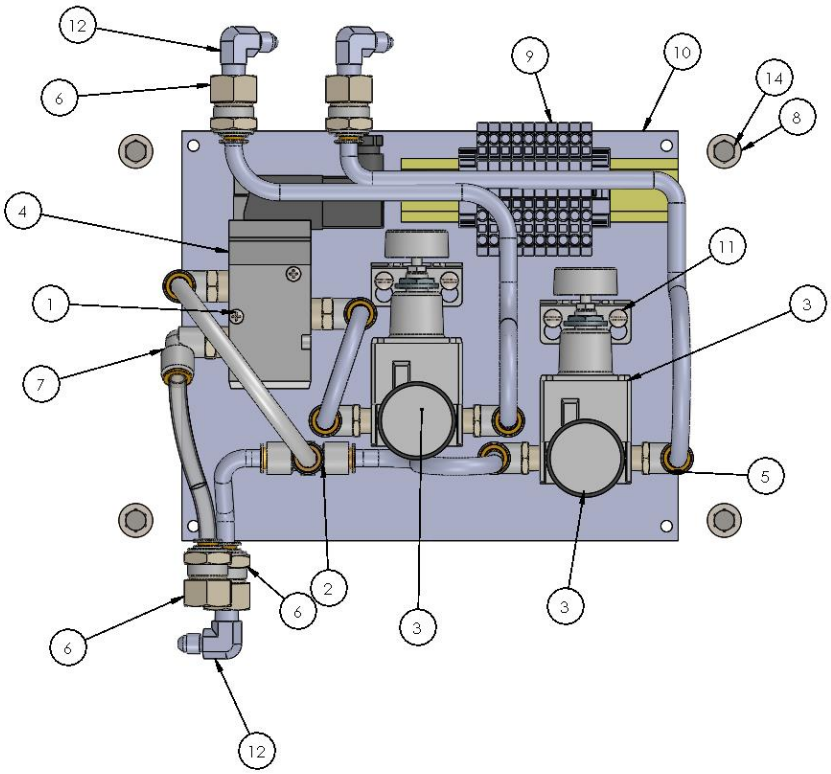

Item #	Part #	Description	Quantity
1	43780	SCREW, PAN HEAD 8-32 x 1.75" ZINC PLT	2
2	39110	0.375 PLUG IN TEE (KQ2T11-00)	1
3	36189	REGULATOR, IR2020-N02BG-R	2
4	36184	VALVE, AIR, VP542-5DZ1-03TA	1
5	28663	0.375 PLUG IN X 0.25 NPT 90º ELBOW	4
6	28662	0.375 PLUG IN X 0.25 FNPT BULKHEAD	4
7	22112	0.375 PLUG IN X 0.375 NPT 90º ELBOW,	3
8	17650	WASHER, FLAT, .25"	4
9	17452	TERMINAL, 3WIRE	10
10	16575	BACK PLATE, 12X10 ALUM (NOT SHOWN)	1
11	16119	SCREW, BINDING, 10-32 x .50"	4
12	15581	# 4 MNPT X # 4 MJIC 90 DEG	3
13	14528	BOX, JUNCTION	1
14	14305	BOLT, HHCS, .25" X .75" NC GR5	4
15	14204	TERMINAL BLOCK	2

OD Motor Mount

Revision: A

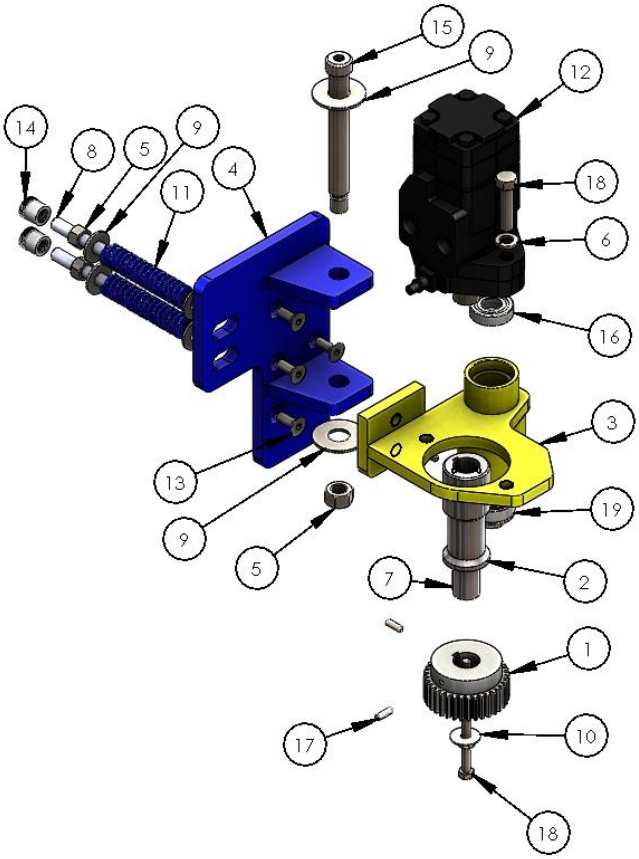

Item #	Part	Description	Quantity
1	38817	36 TEETH, 3" PD, SPUR GEAR	1
2	115-300-522-012	MOTOR DRIVE SHAFT	1
3	115-700-520-00	OD CART MOTOR MOUNT, LT	1
4	115-700-521-00	OD CART MOTOR MOUNT BRACKET,LT	1
5	13999	NUT, LOCK, .50" NC NYLOCK	3
6	14140	WASHER, LOCK, .50"	2
7	16299	KEY STOCK, 1/4" SQ. (1" L)	1
8	17354	STUD, ATR, .50" X 6" NC B7	2
9	17649	WASHER, FLAT, .50"	7
10	23661	Wide FW 0.3125	1
11	24448	4" LG COMPRESSION SPRING 1" OD X 1/2" ID	2
12	28544	HYDRAULIC MOTOR	1
13	36357	BOLT, FHSCS, .375" X 1" NC	6
14	41305	SOCKET HEAD CAP SCREW NUT, .5" NC	2
15	41307	BOLT, SHOULDER, .75" X 5.5"	1
16	41410	BEARING, BALL, DOUBLE SEALED, 3/4"	1
17	41918	SET SCREW, .25”-20 X .50” HEX	4
18	42691	BOLT, HHCS .3125" x 5" NC	3

Drive Roller Assembly

Revision: C

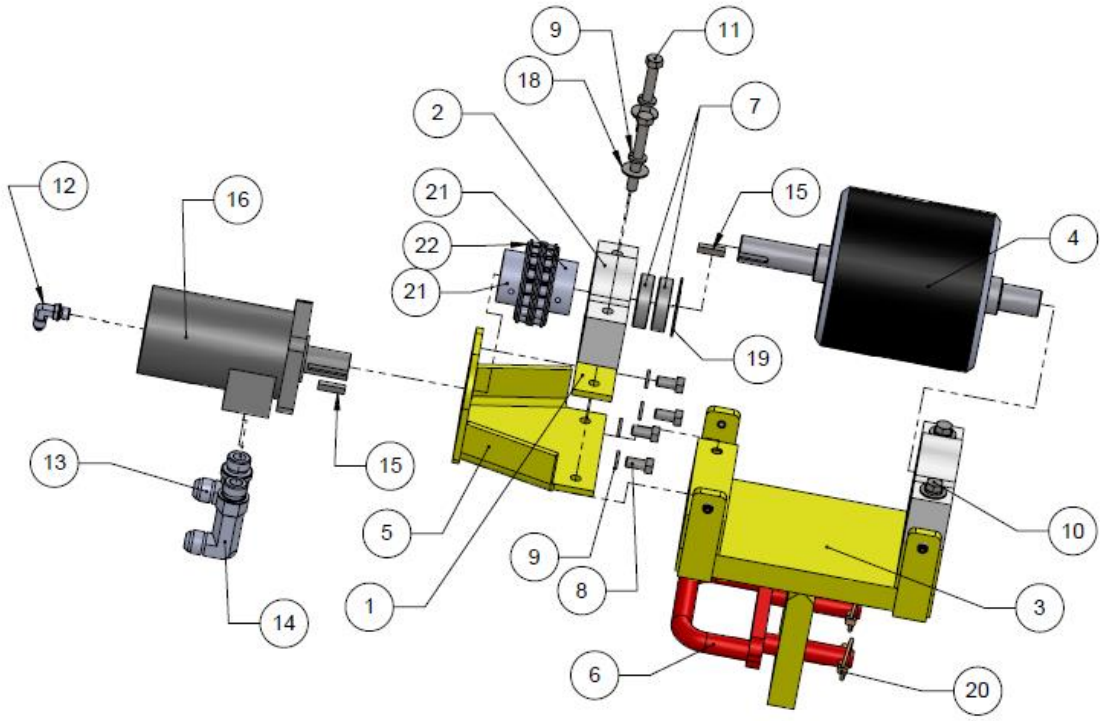

Item #	Part #	Description	Quantity
1	115-110-006-018	SPACER PLATE	1
2	115-110-010-018	BEARING HOUSEING, WHEEL	2
3	115-700-010-00	FRAME, ROLLER, DRIVE	1
4	115-700-007-00	RUN ROLLER	1
5	115-700-086-00	MOTOR MOUNT, HI TORQUE	1
6	115-700-006-00	POLLER PIN	1
7	41421	BEARING, BALL, DOUBLE SEALED	4
8	14144	BOLT, HEX HEAD	4
9	14145	WASHER, LOCK	8
10	14330	BOLT, HEX HEAD	2
11	14348	BOLT, HEX HEAD	2
12	15612	UNION, JIC-SAE ORING	1
13	15739	UNION, JIC-SAE ORING	1
14	15790	UNION, JIC-SAE ORING	1
15	16299	KEYSTOCK	2
16	16391	HYDRAULIC MOTOR	1
17	17158	SET SCREW	4
18	17656	WASHER, FLAT	4
19	21483	RETAINING RING, INTERNAL	2
20	29406	LINCH PIN	2
21	40606	SHAFT COUPLING	2
22	40607	COUPLING CHAIN	1

Load/Unload Paddle Assembly

Revision: A

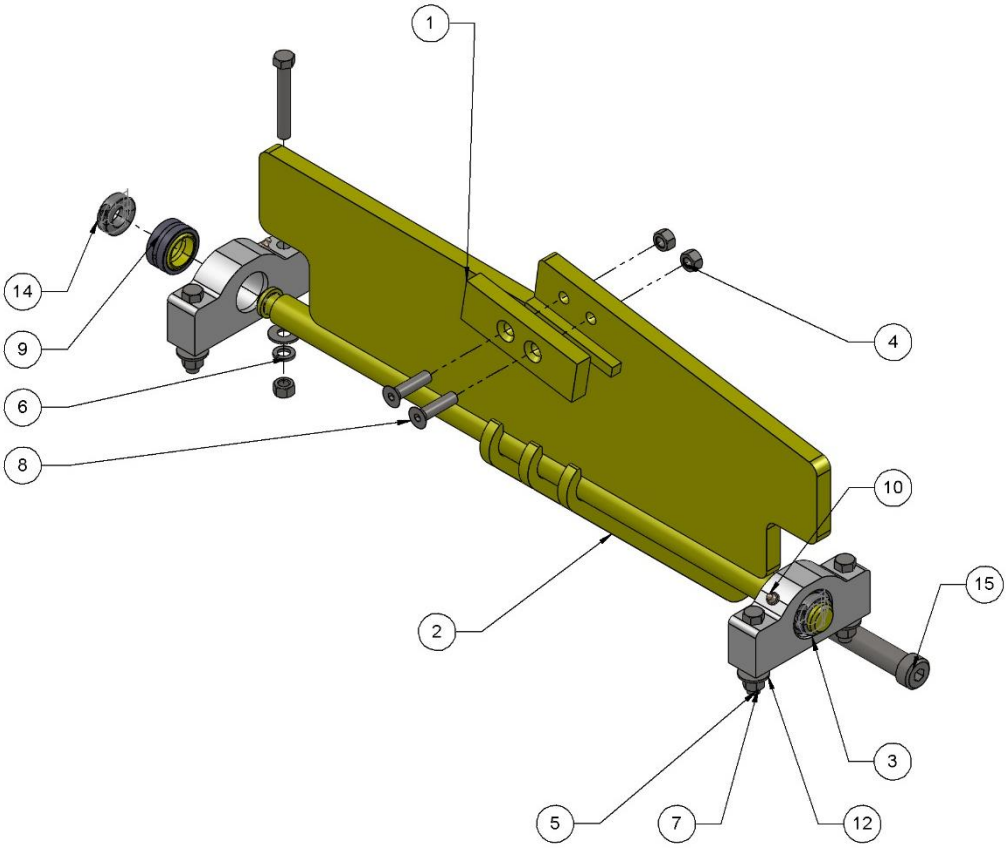

Item #	Part #	Description	Quantity
1	13592	PADDLE WEAR PAD	1
2	115-700-205-00	PADDLE	1
3	13609	BEARING BLOCK	2
4	13999	NUT, LOCK	2
5	14124	NUT, HEX	4
6	14140	WASHER, LOCK	4
7	14361	BOLT, HEX HEAD	4
8	14495	BOLT, FLAT HEAD, SCS	2
9	14645	BEARING, SPHERICAL	2
10	16086	GREASE ZERK	2
11	16321	NUT, LOCK	1
12	17649	WASHER, FLAT	4
13	17653	WASHER, FLAT	1
14	38072	COLLAR, CLAMP	2
15	38824	BOLT, SHOULDER	1

Back Plate Linear Bearing

Revision: A

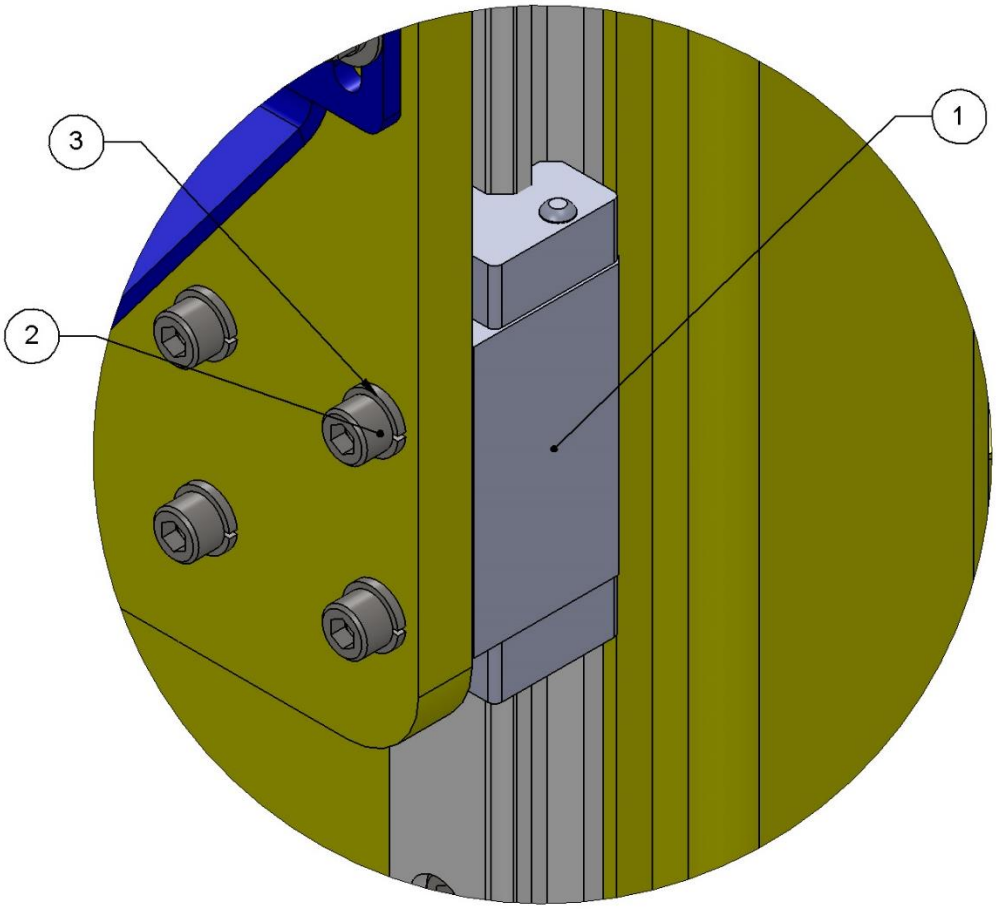

Item #	Part	Description	Quantity
1	16091	LINEAR BEARING	4
2	24889	BOLT	16
3	17668	WASHER, LOCK	16

Cart Roller

Revision: A

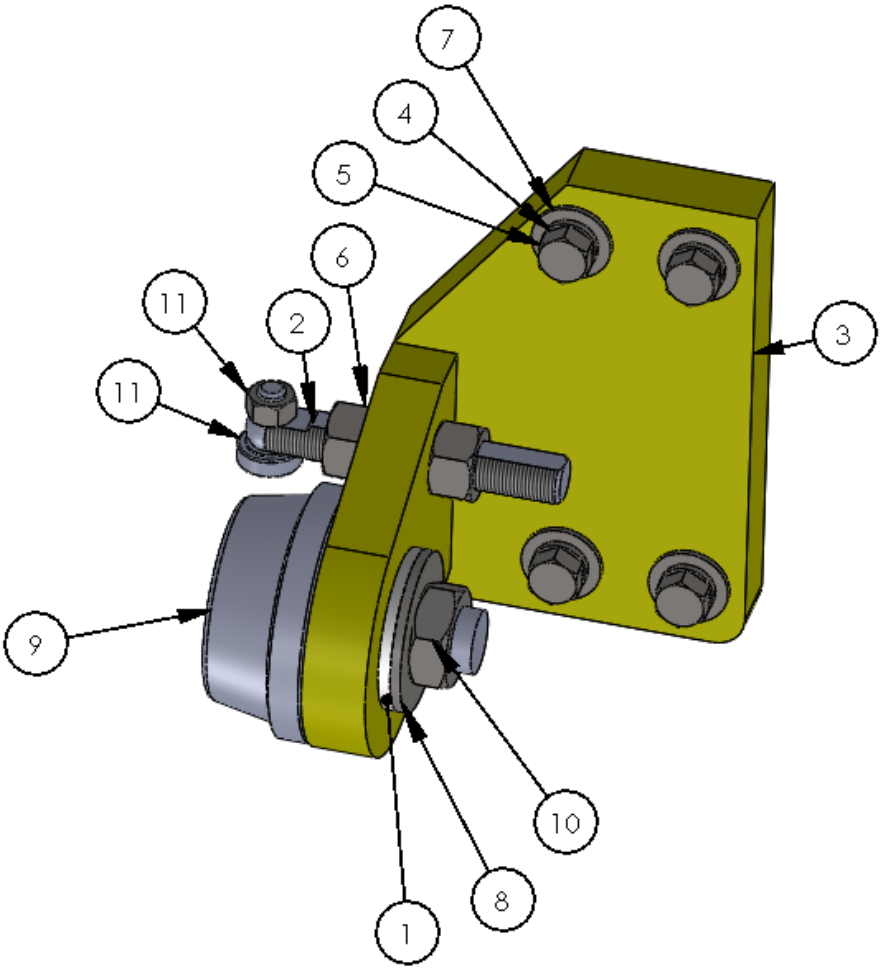

Item #	Part	Description	Quantity
1	115-300-076-018	TRACK ROLLER SPACER	1
2	48064	ADJ. WHEEL ROD	1
3	48062 / 48063	LEFT / RIGHT TRACKER ROLLER MOUNT	1
4	14140	WASHER, LOCK, .50"	4
5	14312	BOLT, HHCS, .50" X 2" NC GR5	4
6	16485	NUT, HEX, .75" NC	2
7	17649	WASHER, FLAT, .50"	4
8	17652	WASHER, FLAT, 1"	1
9	39109	TRACK ROLLER	1
10	39112	NUT, JAM LOCK, 1"-14 GR8	1
11	41271	STUD MOUNT TRACK ROLLER 1" X 5/8" W	1

Lance Drive Cart

Revision: C

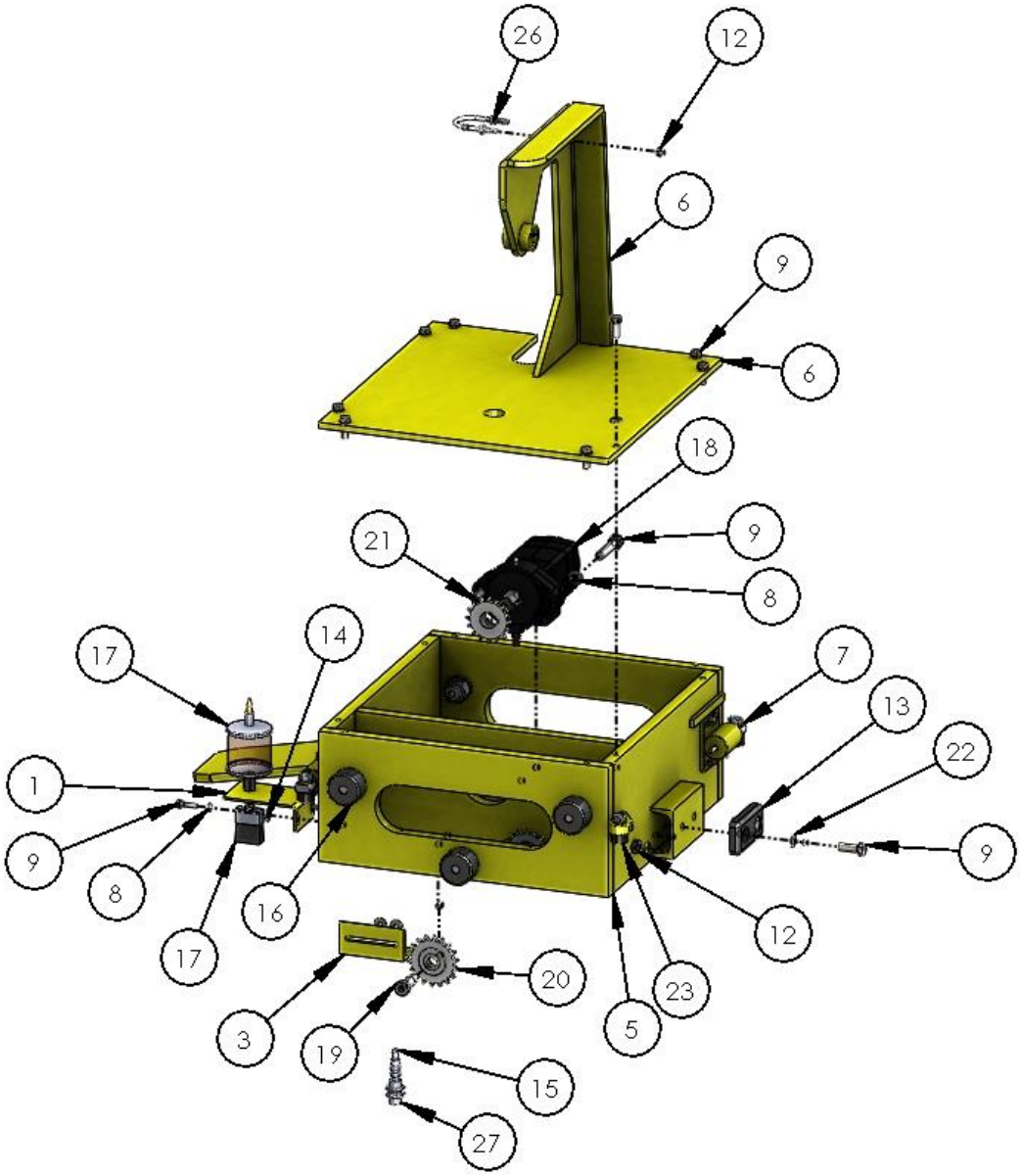

Item #	Part	Description	Quantity
1	115-400-108-018	OILER BRACKET	1
2	115-400-109-XXX	DRIVE CART UNISTRUT	1
3	115-400-151-018	PROX SENSOR MOUNT BAR	2
4	115-400-152-018	ECCENTRIC BUSHING SPACER	2
5	115-700-228-00	DRIVE CART FRAME	1
6	115-700-314-00	LANCE HANGER ASSEMBLY	1
7	115-701-354-00	ID CAR RAIL TENSIONER	2
8	14138	WASHER, LOCK, .25"	26
9	14139	BOLT, HHCS, .25" X 1" NC	20
10	14986	CORD GRIP, 1/2" CGB- 3/8"CORD	1
11	15848	#10 MSAE X #6 MJIC 90º ELBOW , 2062-10-6, (6-10_c5ox-s)	2

12	16541	NUT, HEX, .25" NC, NYLOCK	12
13	16793	2" X 4" RUBBER STOP	1
14	17650	WASHER, FLAT, .25"	8
15	17731	TURCK CABLE,3WIRE 6 FEET RK 4T-2	2
16	27201	2.0 IN CAM FOLLOWER WHEEL (CCF 2 SB)	4
17	28129	5 OZ. OILER ADJUSTABLE FLOW W/BRUSH	1
18	28544	HYDRAULIC MOTOR, WHITE, RS SERIES	1
19	29408	BOLT, SHOULDER, .625" X 1" X .5-13	2
20	36129	SPROCKET, IDLER, 0.625" #40, 18 TEETH, (6663K420)	2
21	36130	SPROCKET, ROLLER CHAIN, 1" #40. 16 TEETH, (6280K704)	1
22	38619	WASHER, FLAT, .375" X .734" OD (NARROW)	2
23	40933	1" ECCENTRIC CAM FOLLOWER 2300LB DYANMIC LOAD	3
24	40934	ECCENTRIC 2.0 IN CAM FOLLOWER WHEEL	2
25	41161	ENCLOSURE, FIBERGLASS 5"X5"X4"	1
26	41434	UBOLT, .25"+ NUTS (FOR 1.50" OD) (3043T180)	1
27	44133	PROX SENSOR, 15mmSD 18MM NI15U-EM18WD	2

Hose Schedule

ITEM NO.	PART NUMBER	FROM	TO	ADDITIONAL NOTES	DESCRIPTION	QTY.
1	115-610-001-00	ROLLER MOTOR UPPER TUBING ASSY	6TH PIPE ROLLER MOTOR	MOTOR FARTHEST AWAY FROM HOME STATION	15562, HOSE 16234 30.50" LG., 15563	1
2	115-610-002-00	ROLLER MOTOR LOWER TUBING ASSY	6TH PIPE ROLLER MOTOR	MOTOR FARTHEST AWAY FROM HOME STATION	15562, HOSE 16234 30.50" LG., 15563	1
3	115-610-003-00	CASE DRAIN TUBING ASSY	6TH PIPE ROLLER MOTOR	MOTOR FARTHEST AWAY FROM HOME STATION	15544, HOSE 16228 28.875" LG., 15544	1
4	115-610-004-00	ROLLER MOTOR UPPER TUBING ASSY	ROLLER MOTOR UPPER TUBING ASSY	JUMPS THE TWO TUBING ASSY TOGETHER	15562, HOSE 16234 17.875" LG., 15562	2
5	115-610-005-00	ROLLER MOTOR UPPER TUBING ASSY	ROLLER MOTOR UPPER TUBING ASSY	JUMPS THE TWO TUBING ASSY TOGETHER	15562, HOSE 16234 19"LG., 15562	2
6	115-610-006-00	ROLLER MOTOR UPPER TUBING ASSY	ROLLER MOTOR UPPER TUBING ASSY	JUMPS THE TWO TUBING ASSY TOGETHER	15562, HOSE 16234 16.875" LG., 15562	2
7	115-610-007-00	VANE MOTOR BLK HD	VANE MOTOR		15560, HOSE 16233 31.5" LG., 15555	1
8	115-610-008-00	VANE MOTOR BLK HD	VANE MOTOR		15555, HOSE 16233 25" LG., 15560	1
9	115-610-009-00	VANE MOTOR BLK HD	VANE MOTOR		15555, HOSE 16233 34.75" LG., 15560	1
10	115-610-010-00	VANE MOTOR BLK HD	VANE MOTOR		15555, HOSE 16223 40" LG., 15560	1
11	115-610-012-00	CASE DRAIN TUBING RUN	5TH PIPE ROLLER MOTOR		15544, HOSE 16228 57.875" LG., 15544	1
12	115-610-013-00	ROLLER MOTOR UPPER TUBING ASSY	5TH PIPE ROLLER MOTOR		15566, HOSE 16234 63.375" LG., 15562	1
13	115-610-014-00	ROLLER MOTOR UPPER TUBING ASSY	5TH PIPE ROLLER MOTOR		15563, HOSE 16234 64,125" LG., 15562	1
14	115-610-015-00	ROLLER MOTOR UPPER TUBING ASSY	4TH PIPE ROLLER MOTOR		15566, HOSE 16234 34.50" LG., 15562	1
15	115-610-016-00	ROLLER MOTOR UPPER TUBING ASSY	4TH PIPE ROLLER MOTOR		15563, HOSE 16234 35.875" LG., 15562	1
16	115-610-017-00	CASE DRAIN TUBING ASSY	4TH PIPE ROLLER MOTOR		15544, HOSE 16228 26.5" LG., 15544	1
17	115-610-018-00	ROLLER MOTOR UPPER TUBING ASSY	3RD PIPE ROLLER MOTOR		15566, HOSE 16234 57.5" LG., 15562	1
18	115-610-019-00	ROLLER MOTOR UPPER TUBING ASSY	3RD PIPE ROLLER MOTOR		15563, HOSE 16234 54" LG., 15562	1
19	115-610-020-00	CASE DRAIN TUBING RUN	3RD PIPE ROLLER MOTOR		15544, HOSE 16228 51" LG., 15544	1
20	115-610-021-00	ROLLER MOTOR UPPER TUBING ASSY	2ND PIPE ROLLER MOTOR		15566, HOSE 16234 31.5" LG., 15562	1
21	115-610-022-00	ROLLER MOTOR UPPER TUBING ASSY	2ND PIPE ROLLER MOTOR		15563, HOSE 16234 33" LG., 15562	1
22	115-610-023-00	CASE DRAIN TUBING ASSY	2ND PIPE ROLLER MOTOR		15544, HOSE 16228 27.25" LG., 15544	1
23	115-610-024-00	ROLLER MOTOR UPPER TUBING ASSY	1ST PIPE ROLLOER MOTOR	PIPE ROLLER MOTOR CLOSEST TO HOME SECTION	15566, HOSE 16234 56.625" LG., 15562	1
24	115-610-025-00	ROLLER MOTOR UPPER TUBING ASSY	1ST PIPE ROLLOER MOTOR	PIPE ROLLER MOTOR CLOSEST TO HOME SECTION	15563, HOSE 16234 54.75" LG., 15562	1
25	115-610-026-00	CASE DRAIN TUBING ASSY	1ST PIPE ROLLOER MOTOR	PIPE ROLLER MOTOR CLOSEST TO HOME SECTION	15544, HOSE 16228 48.625" LG., 15544	1
26	115-610-027-00	LOWER FRAME BLK HD PLTE	PADDLE CYLINDER A PORT		15562, HOSE 16234 21.5" LG., 15562	1
27	115-610-028-00	OD CART ECHAIN BULKHEAD	LEFT VANE MOTOR BLK HD		15555, HOSE 16233 198" LG., 15555	1
28	115-610-030-00	LOWER FRAME BLK HD PLTE	PADDLE CYLINDER B PORT		15562, HOSE 16234 31.00" LG., 15562	1
29	115-610-031-00	LOWER FRAME BLK HD PLTE	CASE DRAIN TUBING ASSY		15562, HOSE 16234 20.50" LG., 15562	1
30	115-610-032-00	LOWER FRAME BLK HD PLTE	ROLLER MOTOR LOWER TUBING ASSY		15562, HOSE 16234 18.625" LG 15562	1
31	115-610-033-00	LOWER FRAME BLK HD PLTE	ROLLER MOTOR UPPER TUBING ASSY		15562, HOSE 16234 16.375" LG., 15562	1
32	115-610-034-00	FLIPPER CYL TEE	LOAD SIDE FLIPPER CYL BLK HD		15539, HOSE 16229 45.50" LG., 15539	2
33	115-610-037-00	OD CART ECHAIN BULKHEAD	LEFT VANE MOTOR BLK HD		15555, HOSE 16233 207.5" LG., 15555	1
34	115-610-046-00	VALVE STACK	ID CART MOTOR		15550, HOSE, 16228 X 858.26" LG. 15538	1
35	115-610-047-00	VALVE ENCLOSER SIDE BLKHD	FLIPPER CYL TEE		15551, HOSE 16229 60.00" LG., 15551	1
36	115-610-048-00	VALVE ENCLOSER SIDE BLKHD	FLIPPER CYL TEE		15551, HOSE 16229 65.00" LG., 15551	1
37	115-610-049-00	VALVE ENCLOSER SIDE BLKHD	LOWER FRAME BULKHEAD PLT		15562, HOSE 16234 25.50" LG., 15562	1
38	115-610-050-00	VALVE ENCLOSER SIDE BLKHD	LOWER FRAME BULKHEAD PLT		15562, HOSE 16234 28.50" LG., 15562	1
39	115-610-051-00	VALVE ENCLOSER SIDE BLKHD	LOWER FRAME BULKHEAD PLT		15562, HOSE 16234 29.75" LG., 15562	1
40	115-610-052-00	VALVE ENCLOSER SIDE BLKHD	LOWER FRAME BULKHEAD PLT		15562, HOSE 16234 32.00" LG., 15562	1
41	115-610-053-00	VALVE ENCLOSER SIDE BLKHD	LOWER FRAME BULKHEAD PLT		15562, HOSE 16234 34.25" LG., 15562	1
42	115-610-054-00	VALVE ENCLOSER SIDE BLKHD	LOWER FRAME BULKHEAD PLT		15562, HOSE 16234 37.25" LG., 15562	1
43	115-610-055-00	VALVE ENCLOSER SIDE BLKHD	LOWER FRAME BULKHEAD PLT		15562, HOSE 16234 38.50" LG., 15562	1
44	115-610-056-00	OD CART ECHAIN BULKHEAD	RIGHT VANE MOTOR BLK HD		15555, HOSE 16233 207" LG., 15555	1
45	115-610-057-00	VALVE ENCLOSURE UPPER BLK HD	UPPER FRAME BLK HD PLTE	BRUSH MOTOR LINE 1	15560, HOSE 16233 19.25" LG., 15549	1
46	115-610-058-00	VALVE ENCLOSURE UPPER BLK HD	UPPER FRAME BLK HD PLTE	BRUSH MOTOR LINE 2	15560, HOSE 16233 18.875" LG., 15549	1
47	115-610-059-00	VALVE ENCLOSURE UPPER BLK HD	UPPER FRAME BLK HD PLTE	BRUSH MOTOR LINE 3	15560, HOSE 16233 18.50" LG., 15549	1
48	115-610-060-00	VALVE ENCLOSURE UPPER BLK HD	UPPER FRAME BLK HD PLTE	BRUSH MOTOR LINE 4	15560, HOSE 16233 18.187" LG., 15549	1

49	115-610-061-00	VALVE ENCLOSURE UPPER BLK HD	UPPER FRAME BLK HD PLTE	AIR SUPPLY FOR BRUSH FRAME TILT CYLINDERS	15562, HOSE 16234 18.83" LG., 15566	1
50	115-610-062-00	VALVE ENCLOSURE UPPER BLK HD	UPPER FRAME BLK HD PLTE		15562, HOSE 16234 18.62" LG., 15566	1
51	115-610-063-00	VALVE ENCLOSURE UPPER BLK HD	UPPER FRAME BLK HD PLTE		15562, HOSE 16234 18.375" LG., 15566	1
52	115-610-064-00	VALVE ENCLOSURE UPPER BLK HD	UPPER FRAME BLK HD PLTE		15562, HOSE 16234 18.187" LG., 15566	1
53	115-610-065-00	VALVE ENCLOSURE UPPER BLK HD	UPPER FRAME BLK HD PLTE		15562, HOSE 16234 18.00" LG., 15566	1
54	115-610-066-00	VALVE ENCLOSURE UPPER BLK HD	UNLOAD SIDE DOOR MOTOR		15562, HOSE 16234 50.00" LG., 15562	1
55	115-610-067-00	VALVE ENCLOSURE UPPER BLK HD	UNLOAD SIDE DOOR MOTOR		15562, HOSE 16234 47.875" LG., 15562	1
56	115-610-068-00	VALVE ENCLOSURE UPPER BLK HD	LOAD SIDE DOOR MOTOR		15562, HOSE 16234 112.25" LG., 15562	1
57	115-610-069-00	OD CART ECHAIN BULKHEAD	RIGHT VANE MOTOR BLK HD		15555, HOSE 16233 216" LG., 15555	1
58	115-610-070-00	VALVE ENCLOSURE BLK HD	LOAD SIDE DOOR MOTOR		15562, HOSE 16234 114.375" LG., 15562	1
59	115-610-071-00	VALVE ENCLOSEURE LOWER BLK HD	VALVE ENCLOSURE UPPER BLK HD	VANE MOTOR	15560, HOSE 16233 42.125" LG., 15560	1
60	115-610-072-00	VALVE ENCLOSEURE LOWER BLK HD	VALVE ENCLOSURE UPPER BLK HD	VANE MOTOR	15560, HOSE 16233 42.75" LG., 15560	1
61	115-610-073-00	VALVE ENCLOSEURE LOWER BLK HD	VALVE ENCLOSURE UPPER BLK HD	VANE MOTOR	15560, HOSE 16233 42.25" LG., 15560	1
62	115-610-074-00	VALVE ENCLOSEURE LOWER BLK HD	VALVE ENCLOSURE UPPER BLK HD	VANE MOTOR	15560, HOSE 16233 43.25" LG., 15560	1
63	115-610-075-00	VALVE ENCLOSURE UPPER BLK HD	OD CART ECHAIN BULKHEAD	VANE MOTORS	15560, HOSE 16233 APROX. 670.00" LG., 15555	4
64	115-610-076-00	VALVE ENCLOSURE UPPER BLK HD	OD CART ECHAIN BULKHEAD		15568, HOSE 16234 APROX. 698.00" LG., 15562	5
65	115-610-086-00	VALVE ENCLOSER SIDE BLKHD	ID CART MOTOR		15550, HOSE, 16228 X 859.39" LG, 15538	1
66	115-610-110-00	VALVE ENCLOSURE UPPER BLK HD	VALVE ENCLOSURE UPPER BLK HD	AIR SUPPLY FOR BRUSH FRAME TILT CYLINDERS	15540, HOSE 16230 APROX. 698.00" LG., 15552	1
67	115-610-111-00	OD CART EHAIN BLK HD	AIR TEE		15552,HOSE 16230 80.00" LG,15540,15598,15648,(2)15677	1
68	115-610-112-00	AIR SPLIT TEE	AIR FILTER ASMBLY RIGHT		15610, HOSE 13973 106.00" LG., 15610	1
69	115-610-113-00	AIR SPLIT TEE	AIR FILTER ASMBLY LEFT		15610, HOSE 13973 110.00" LG., 15610	1
70	115-610-114-00	RIGHT AIR CONTROL BOX	RIGHT BRUSH TILT CYL PORT B		15610, HOSE 13973 30.00" LG., 15610	1
71	115-610-115-00	RIGHT AIR CONTROL BOX	RIGHT BRUSH TILT CYL PORT A		15610, HOSE 13973 31.00" LG., 15610	1
72	115-610-116-00	LEFT AIR CONTROL BOX	LEFT BRUSH TILT CYL PORT A		15610, HOSE 13973 24.75" LG., 15610	1
73	115-610-117-00	LEFT AIR CONTROL BOX	LEFT BRUSH TILT CYL PORT B		15610, HOSE 13973 28.50" LG., 15610	1
74	115-610-118-00	LEFT AIR FILTER ASMBLY	LEFT AIR CONTROL BOX		15610, HOSE 13973 11.50" LG., 15610	1
75	115-610-119-00	RIGHT AIR FILTER ASMBLY	RIGHT AIR CONTROL BOX		15610, HOSE 13973 6.50" LG., 15610	1
76	115-610-226-00	OD CART ECHAIN BULKHEAD	BRUSH LIFT CYL TUBING ASSY		15562, HOSE 16234 139" LG., 15568	1
77	115-610-227-00	OD CART ECHAIN BULKHEAD	OD CART DRIVE MOTOR TUBING ASSY		15562, HOSE 16234 126" LG., 15568	1
78	115-610-228-00	OD CART ECHAIN BULKHEAD	OD CART DRIVE MOTOR TUBING ASSY		15562, HOSE 16234 128.75" LG., 15568	1
79	115-610-229-00	BRUSH LIFT CYL TUBING ASSY	BRUSH LIFT CYL		15562, HOSE 16234 13.875" LG., 15562	1
80	115-610-230-00	OD CART DRIVE MOTOR TUBING ASSY	OD CART DRIVE MOTOR		15562, HOSE 16234 15.875" LG., 15568	1
81	115-610-231-00	OD CART DRIVE MOTOR TUBING ASSY	OD CART DRIVE MOTOR		15562, HOSE 16234 19.125" LG., 15568	1

Recommended Spare Parts

Level A Items (Stocked On Site)		
Part #	**Description**	**Quantity**
13592	PADDLE WEAR PAD	6
36596	ROLLER	2
40606	COUPLING, SHAFT, ROLLER CHAIN	4
40607	ROLLER CHAIN	2
43856	MOTOR MOUNT, HI TORQUE	2
28544	HYDRAULIC MOTOR	1
24448	COMPRESSION SPRING	2
14645	BEARING, SPHERICAL	2
14613	BEARING, PILLOW BLOCK	2
36288	SPUR GEAR	1
14683	WIRE BRUSH	20
Level B Items (1-3 Day Delivery)		
16383	BRUSH MOTOR	1
16391	HYDRAULIC MOTOR	2
16091	LINEAR BEARING	4
Level C Items (0-120 Day Delivery)		
42131	HYDRAULIC PUMP (BRUSH)	1
22353	HYDRAULIC PUMP (AUXILLARY)	1

Hydraulic & Pneumatic Schematic

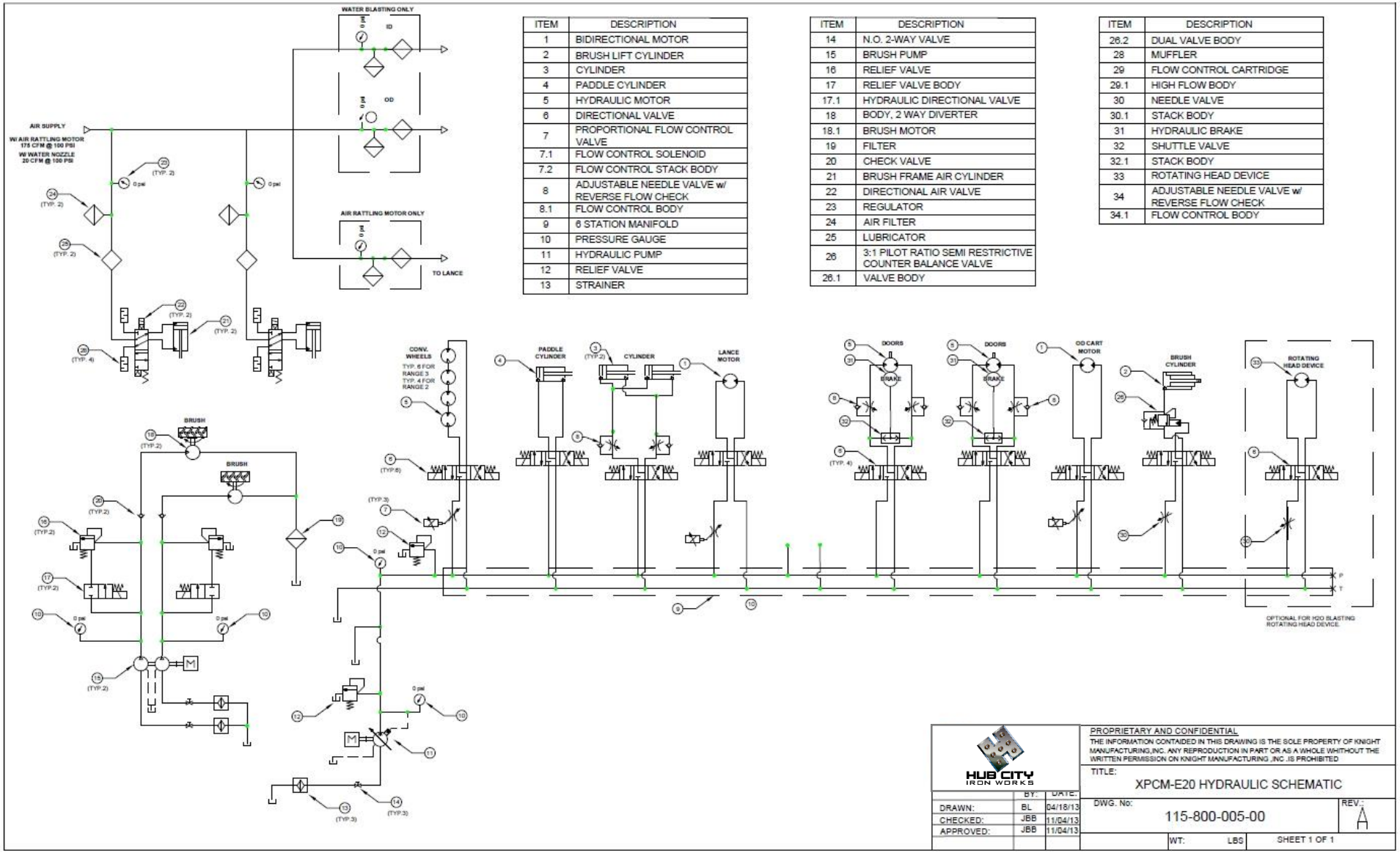

ITEM	DESCRIPTION
1	BIDIRECTIONAL MOTOR
2	BRUSH LIFT CYLINDER
3	CYLINDER
4	PADDLE CYLINDER
5	HYDRAULIC MOTOR
6	DIRECTIONAL VALVE
7	PROPORTIONAL FLOW CONTROL VALVE
7.1	FLOW CONTROL SOLENOID
7.2	FLOW CONTROL STACK BODY
8	ADJUSTABLE NEEDLE VALVE w/ REVERSE FLOW CHECK
8.1	FLOW CONTROL BODY
9	6 STATION MANIFOLD
10	PRESSURE GAUGE
11	HYDRAULIC PUMP
12	RELIEF VALVE
13	STRAINER

ITEM	DESCRIPTION
14	N.O. 2-WAY VALVE
15	BRUSH PUMP
16	RELIEF VALVE
17	RELIEF VALVE BODY
17.1	HYDRAULIC DIRECTIONAL VALVE
18	BODY, 2 WAY DIVERTER
18.1	BRUSH MOTOR
19	FILTER
20	CHECK VALVE
21	BRUSH FRAME AIR CYLINDER
22	DIRECTIONAL AIR VALVE
23	REGULATOR
24	AIR FILTER
25	LUBRICATOR
26	3:1 PILOT RATIO SEMI RESTRICTIVE COUNTER BALANCE VALVE
26.1	VALVE BODY

ITEM	DESCRIPTION
26.2	DUAL VALVE BODY
28	MUFFLER
29	FLOW CONTROL CARTRIDGE
29.1	HIGH FLOW BODY
30	NEEDLE VALVE
30.1	STACK BODY
31	HYDRAULIC BRAKE
32	SHUTTLE VALVE
32.1	STACK BODY
33	ROTATING HEAD DEVICE
34	ADJUSTABLE NEEDLE VALVE w/ REVERSE FLOW CHECK
34.1	FLOW CONTROL BODY

Electrical Schematics

Power Supply Schematic

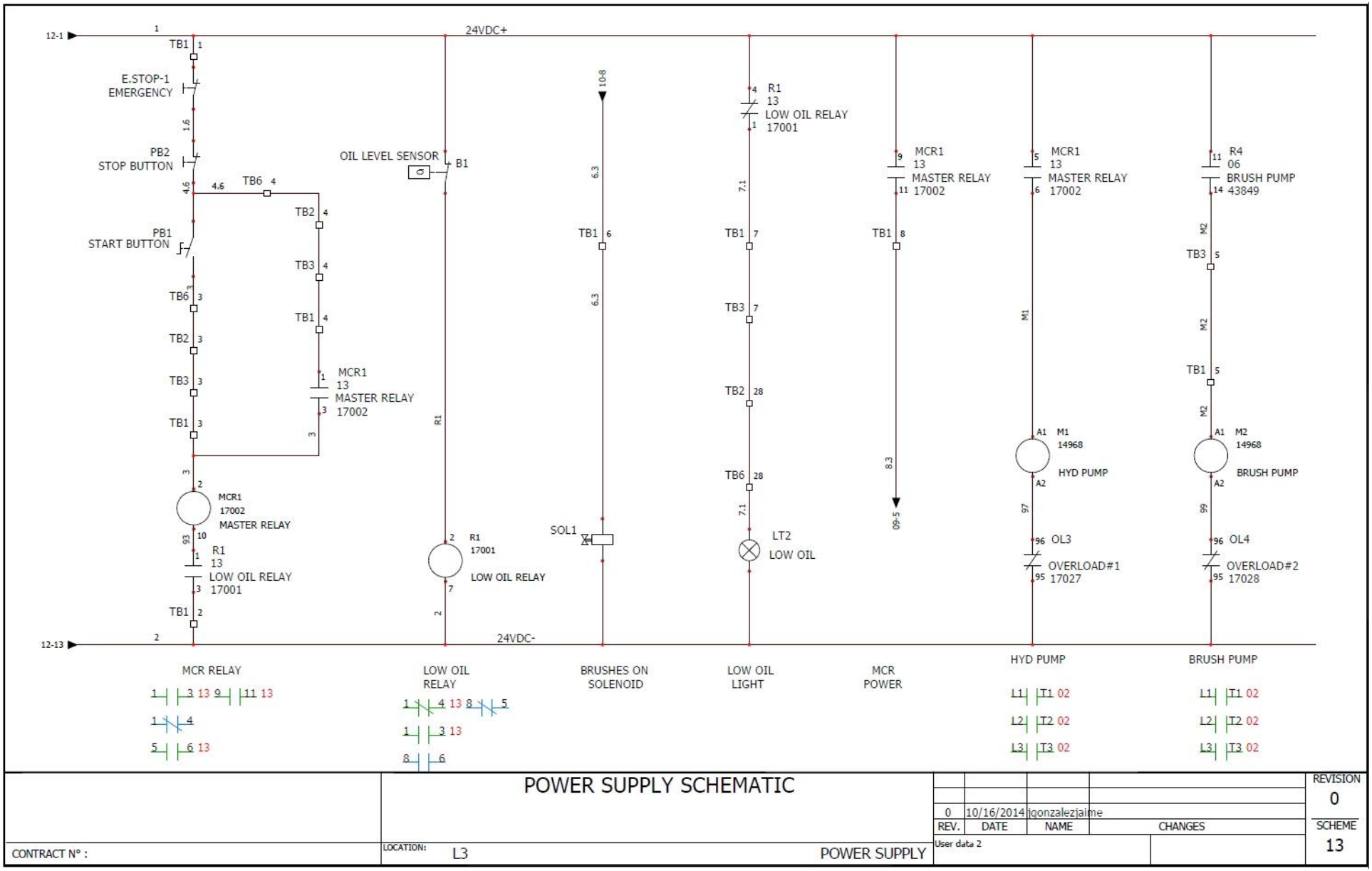

Power Schematic

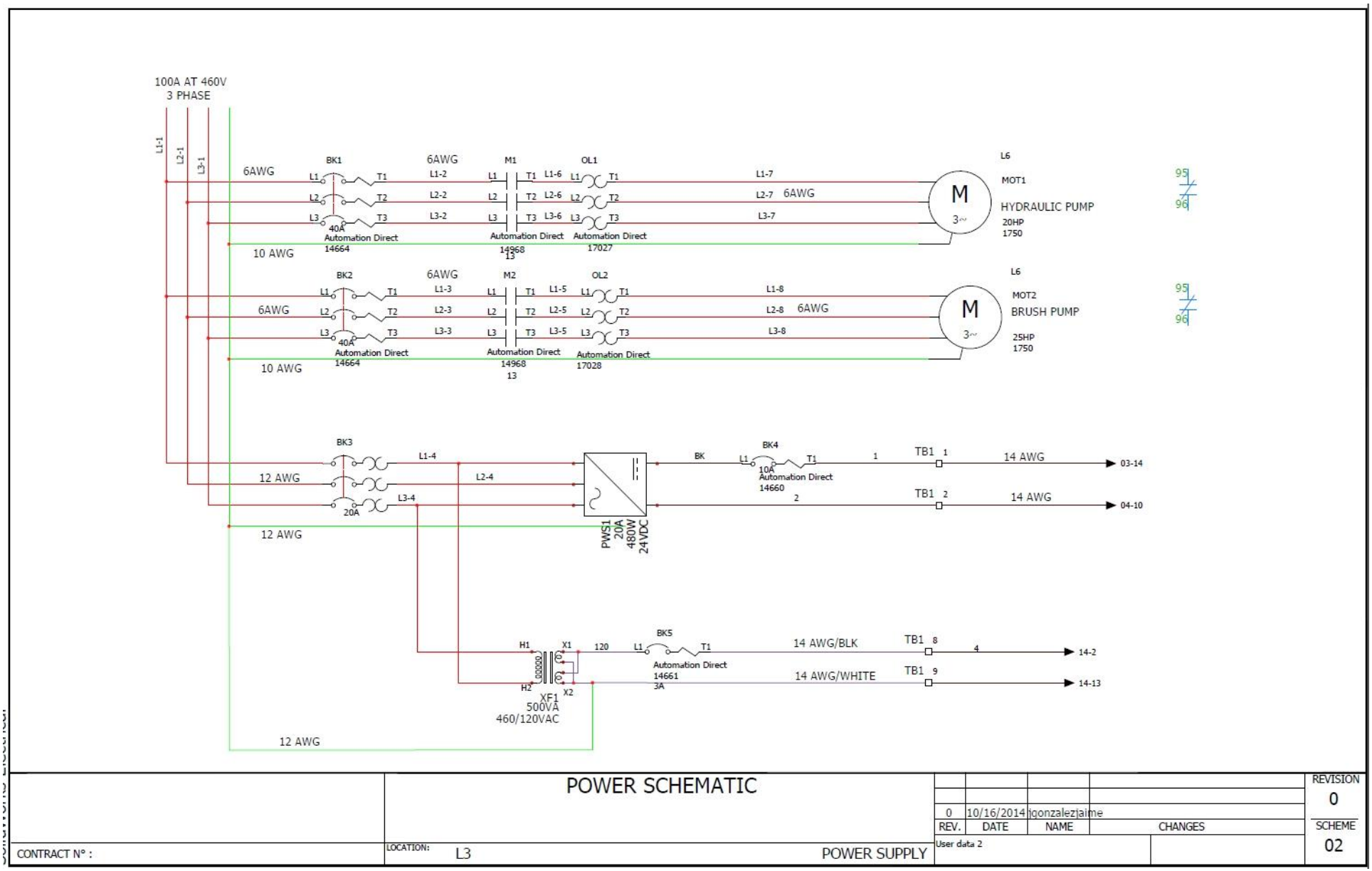

Relay Schematic 1

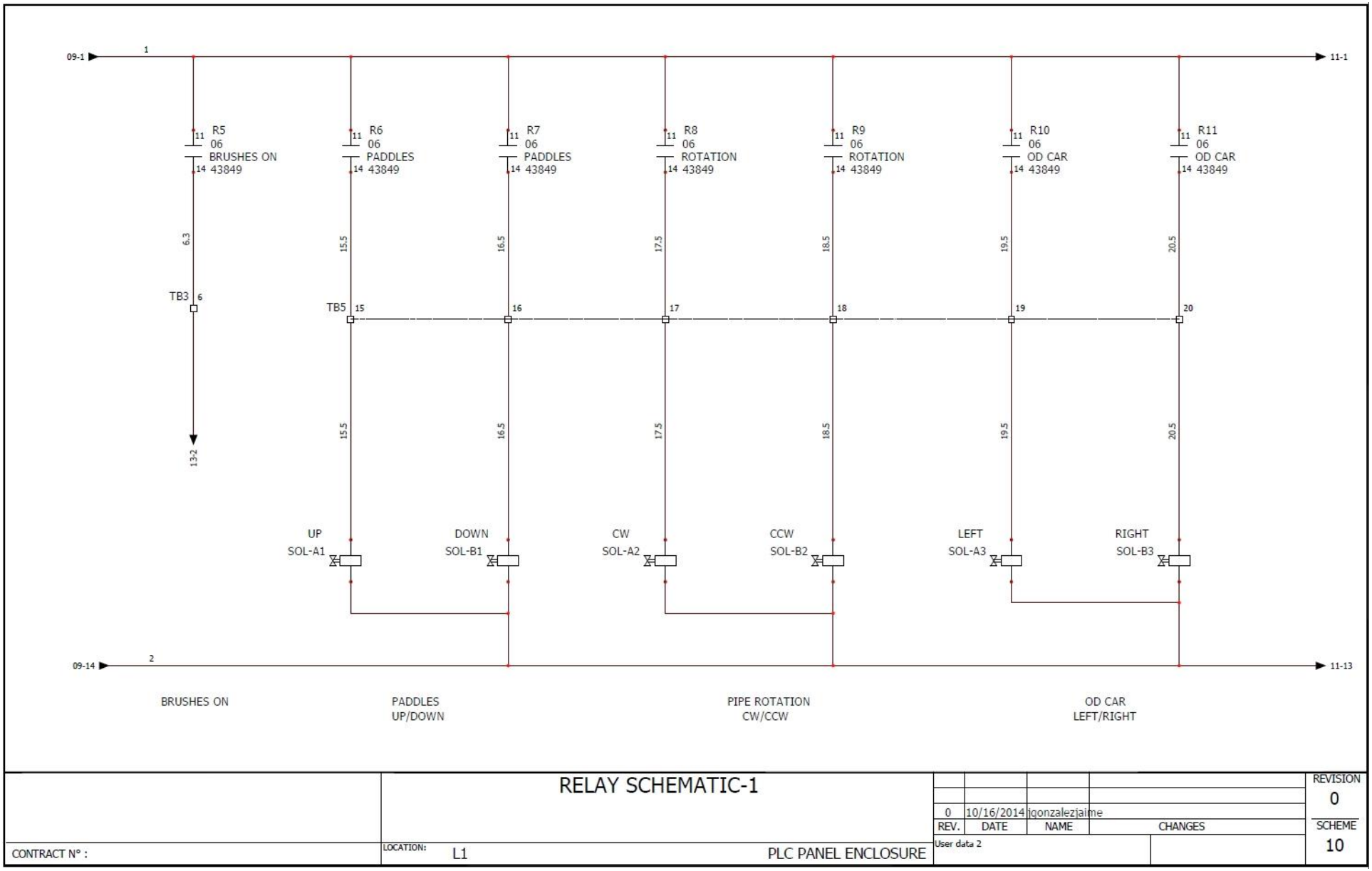

Relay Schematic 2

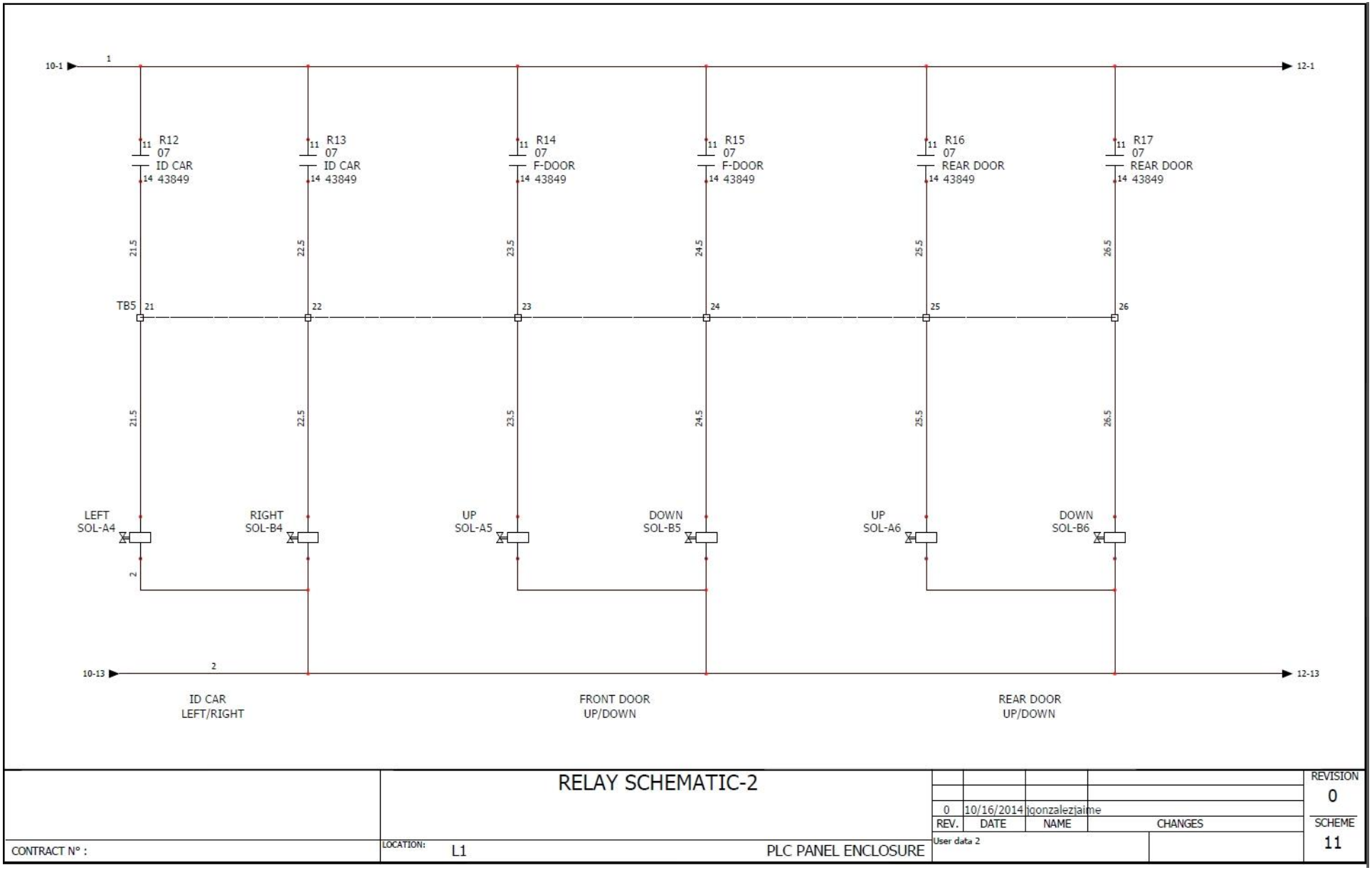

Relay Schematic 3

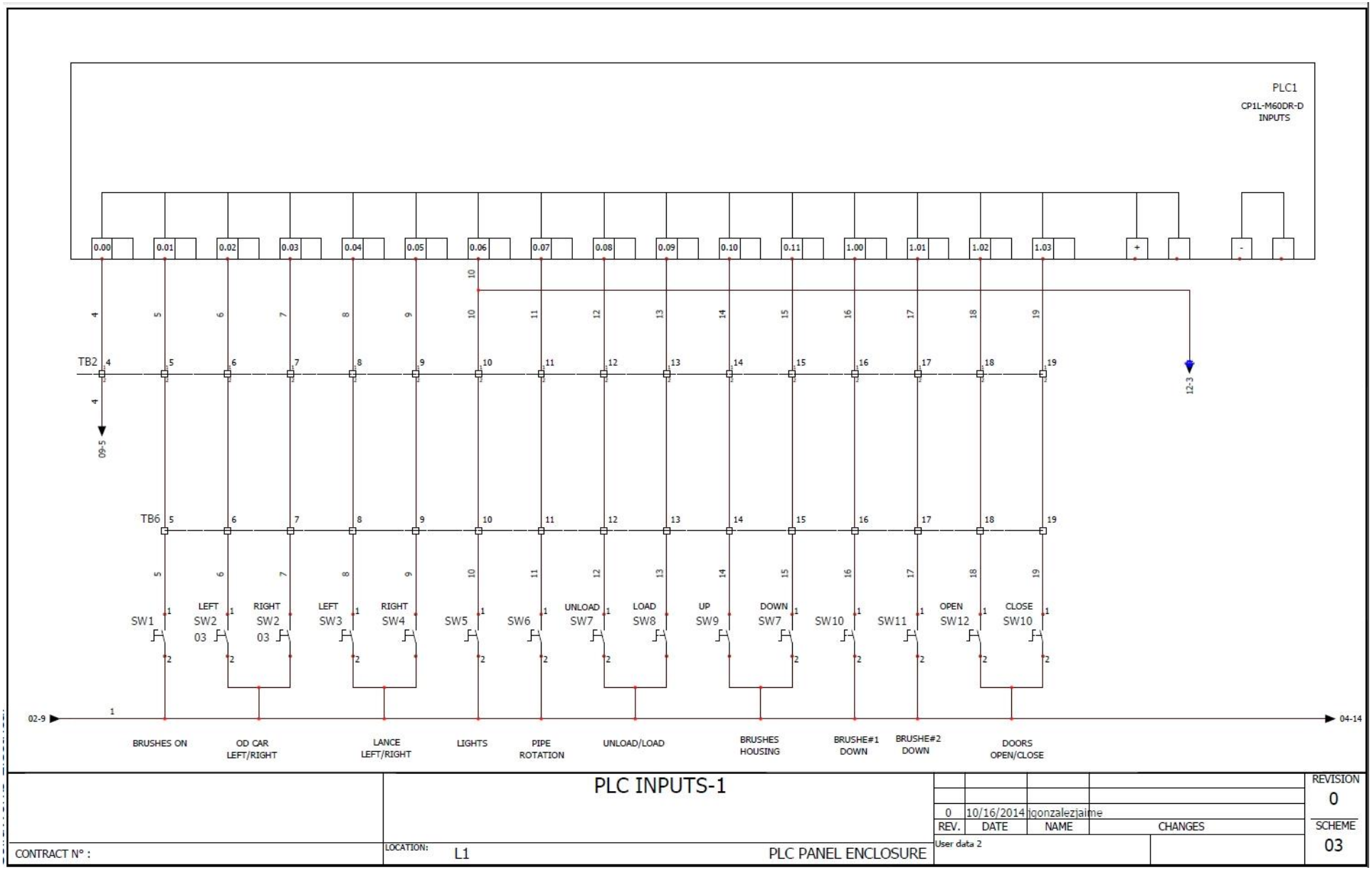

PLC Inputs 1

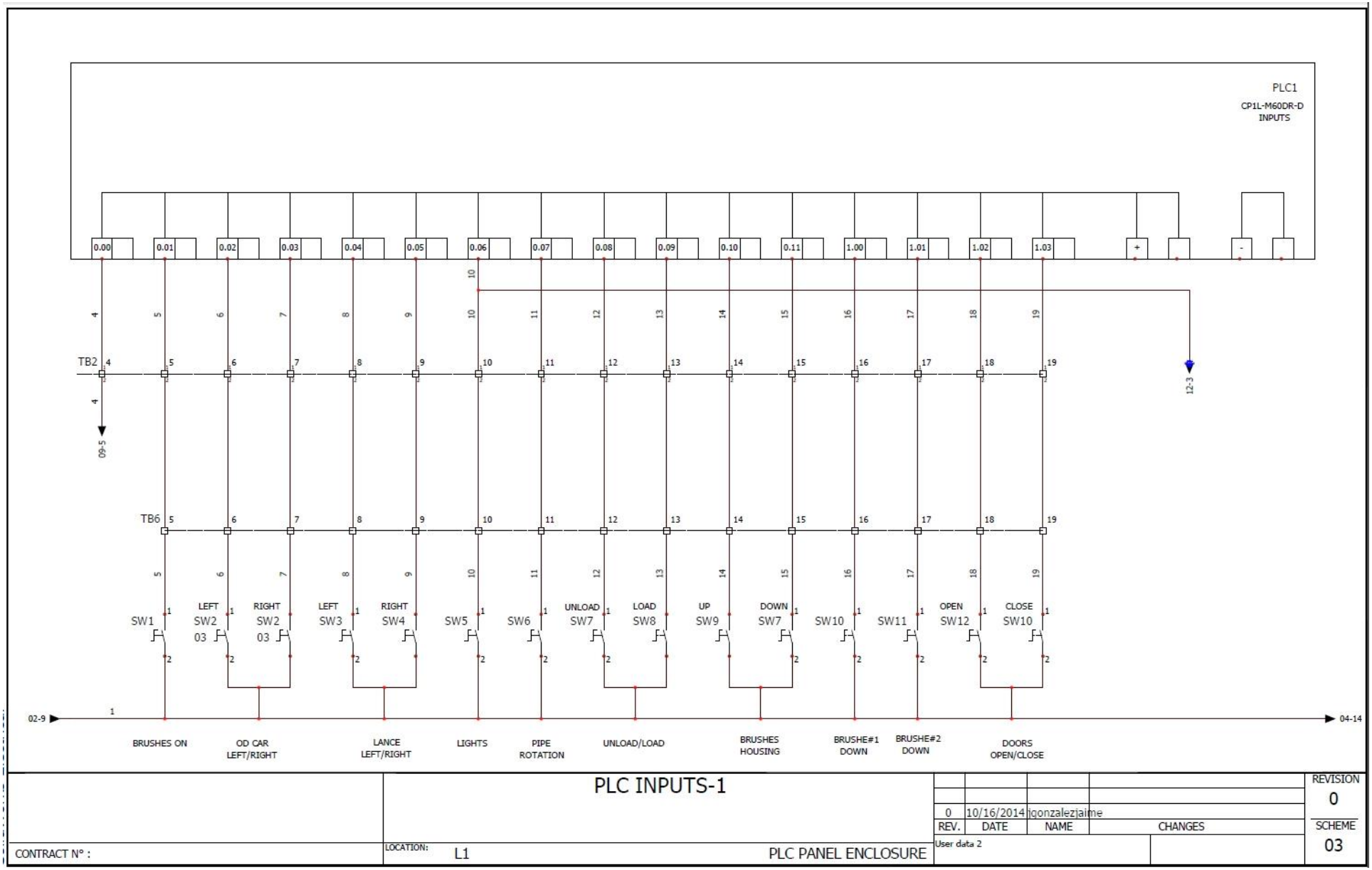
PLC1
CP1L-M60DR-D
INPUTS
0.00
0.01
0.02
0.03
0.04
0.05
0.06
0.07
0.08
0.09
0.10
0.11
1.00
1.01
1.02
1.03
TB2
TB6
09-5
12-3
02-9
04-14
SW1
LEFT SW2 03
RIGHT SW2 03
LEFT SW3
RIGHT SW4
SW5
SW6
UNLOAD SW7
LOAD SW8
UP SW9
DOWN SW7
SW10
SW11
OPEN SW12
CLOSE SW10
BRUSHES ON
OD CAR LEFT/RIGHT
LANCE LEFT/RIGHT
LIGHTS
PIPE ROTATION
UNLOAD/LOAD
BRUSHES HOUSING
BRUSHE#1 DOWN
BRUSHE#2 DOWN
DOORS OPEN/CLOSE
PLC INPUTS-1
REVISION
0
0 10/16/2014 jgonzalezjaime
REV. DATE NAME CHANGES
SCHEME
03
CONTRACT N° :
LOCATION:
L1
PLC PANEL ENCLOSURE
User data 2

PLC Inputs 2

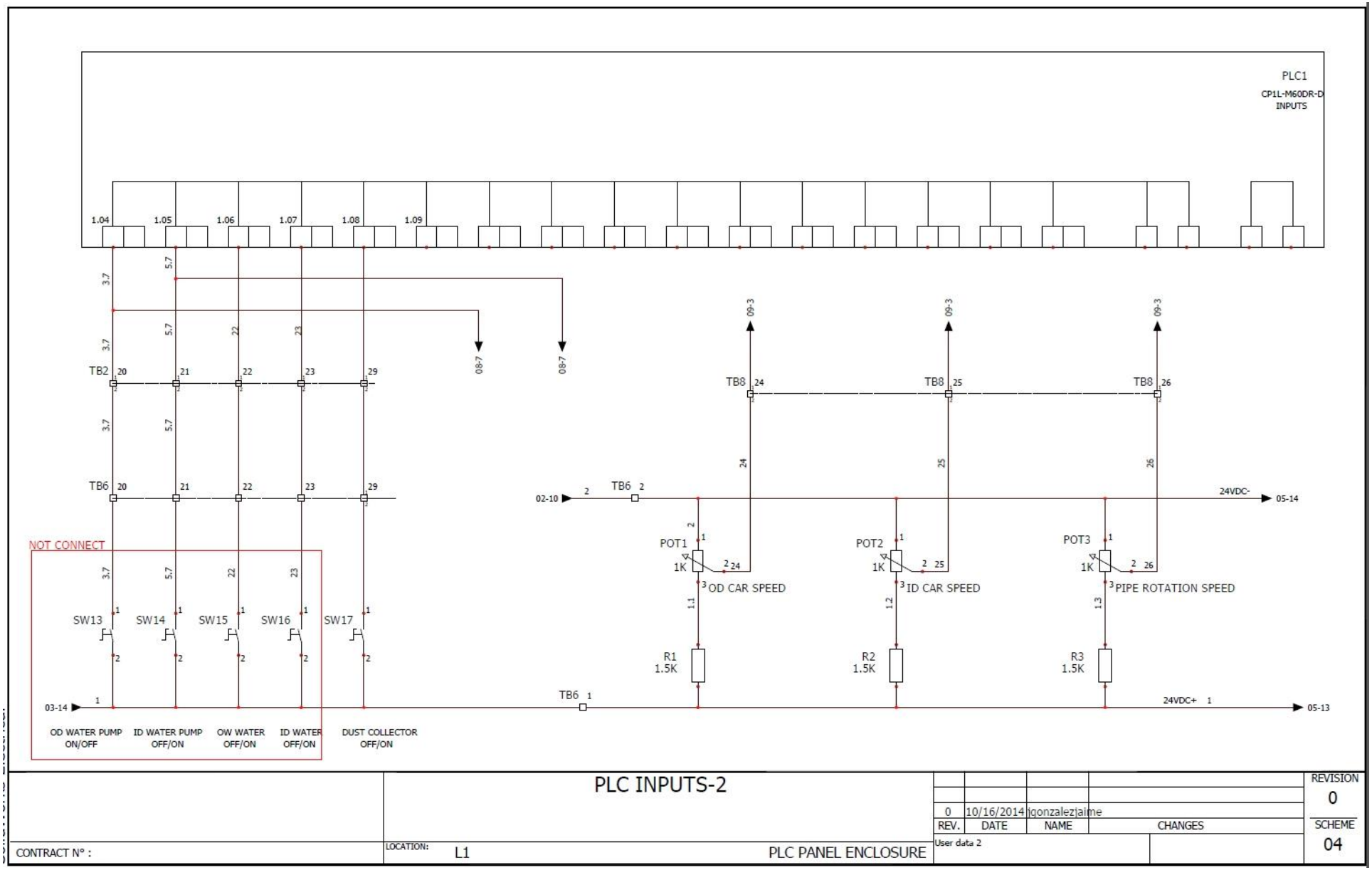
PLC1
CP1L-M60DR-D
INPUTS
1.04
1.05
1.06
1.07
1.08
1.09
TB2
TB6
TB8
NOT CONNECT
SW13
SW14
SW15
SW16
SW17
OD WATER PUMP ON/OFF
ID WATER PUMP OFF/ON
OW WATER OFF/ON
ID WATER OFF/ON
DUST COLLECTOR OFF/ON
03-14
02-10
08-7
09-3
POT1
POT2
POT3
1K
OD CAR SPEED
ID CAR SPEED
PIPE ROTATION SPEED
R1 1.5K
R2 1.5K
R3 1.5K
24VDC-
05-14
24VDC+
05-13
PLC INPUTS-2
REVISION
0
SCHEME
04
REV.
DATE
NAME
CHANGES
10/16/2014
jgonzalezjaime
User data 2
CONTRACT N° :
LOCATION:
L1
PLC PANEL ENCLOSURE

PLC Inputs 3

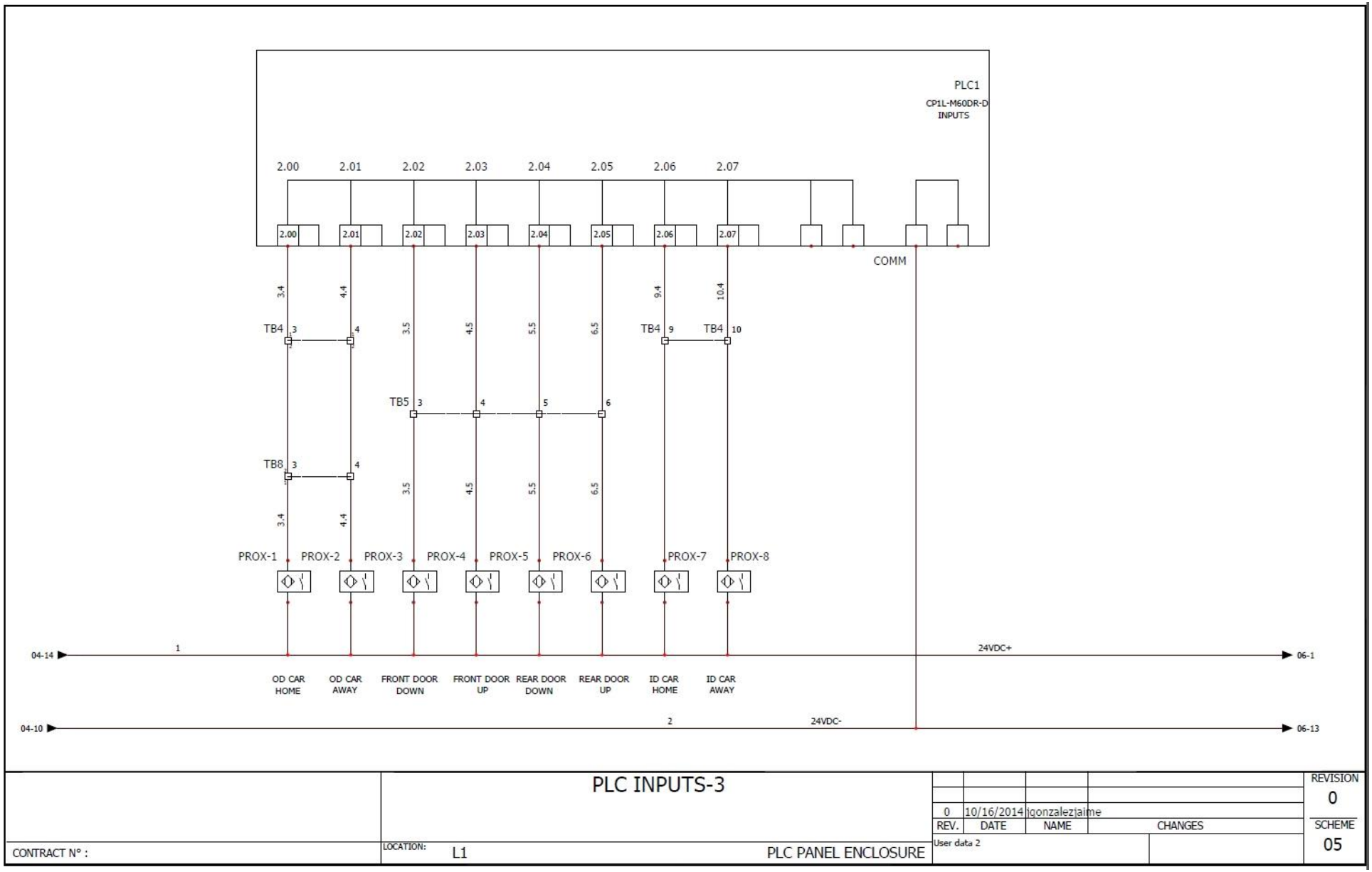
PLC1
CP1L-M60DR-D
INPUTS
2.00
2.01
2.02
2.03
2.04
2.05
2.06
2.07
COMM
TB4
TB5
TB8
PROX-1
PROX-2
PROX-3
PROX-4
PROX-5
PROX-6
PROX-7
PROX-8
04-14
24VDC+
06-1
OD CAR HOME
OD CAR AWAY
FRONT DOOR DOWN
FRONT DOOR UP
REAR DOOR DOWN
REAR DOOR UP
ID CAR HOME
ID CAR AWAY
04-10
24VDC-
06-13
PLC INPUTS-3
REVISION
0
0
10/16/2014
jgonzalezjaime
REV.
DATE
NAME
CHANGES
SCHEME
05
CONTRACT N° :
LOCATION:
L1
PLC PANEL ENCLOSURE
User data 2

PLC Outputs 1

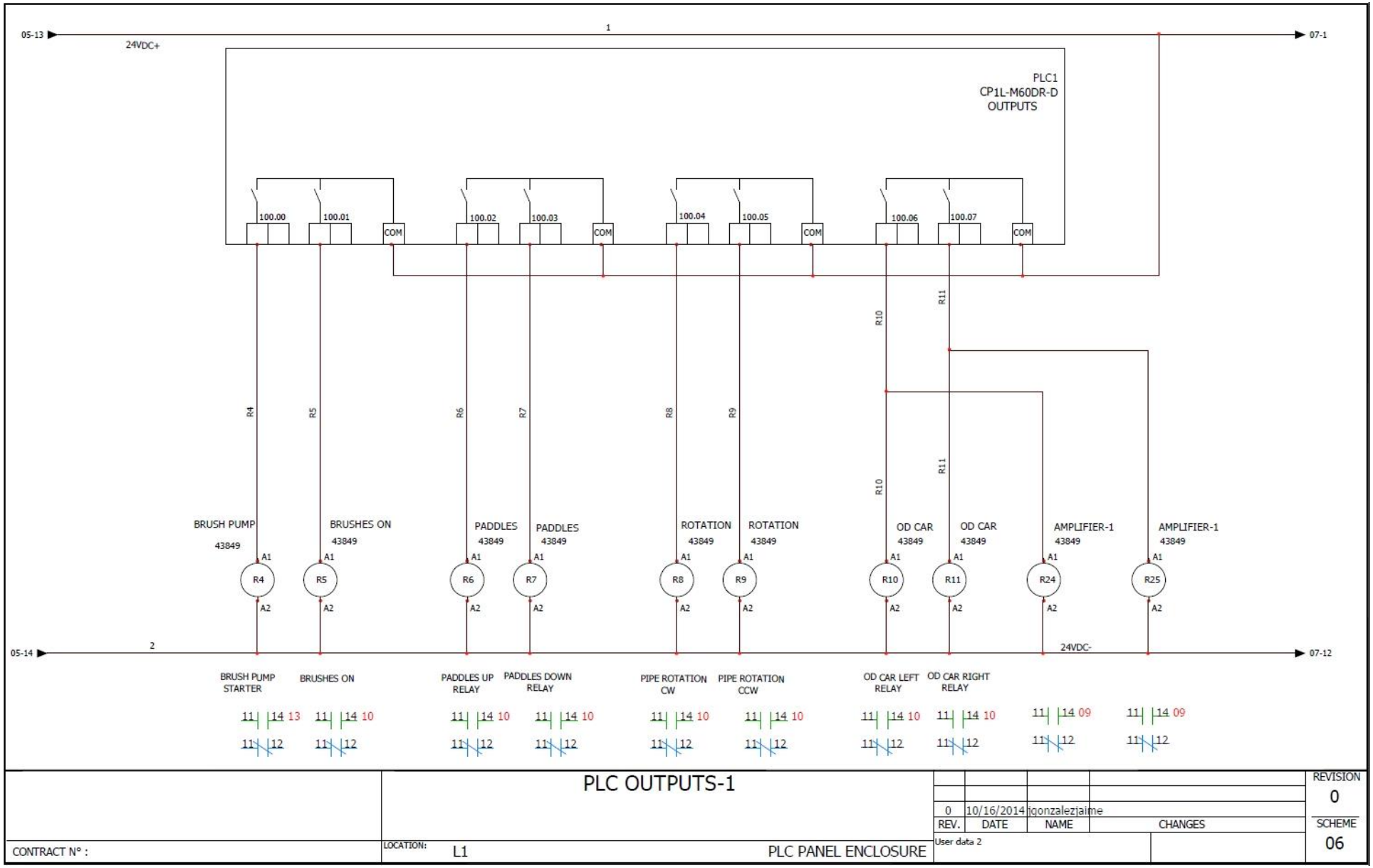

PLC Outputs 2

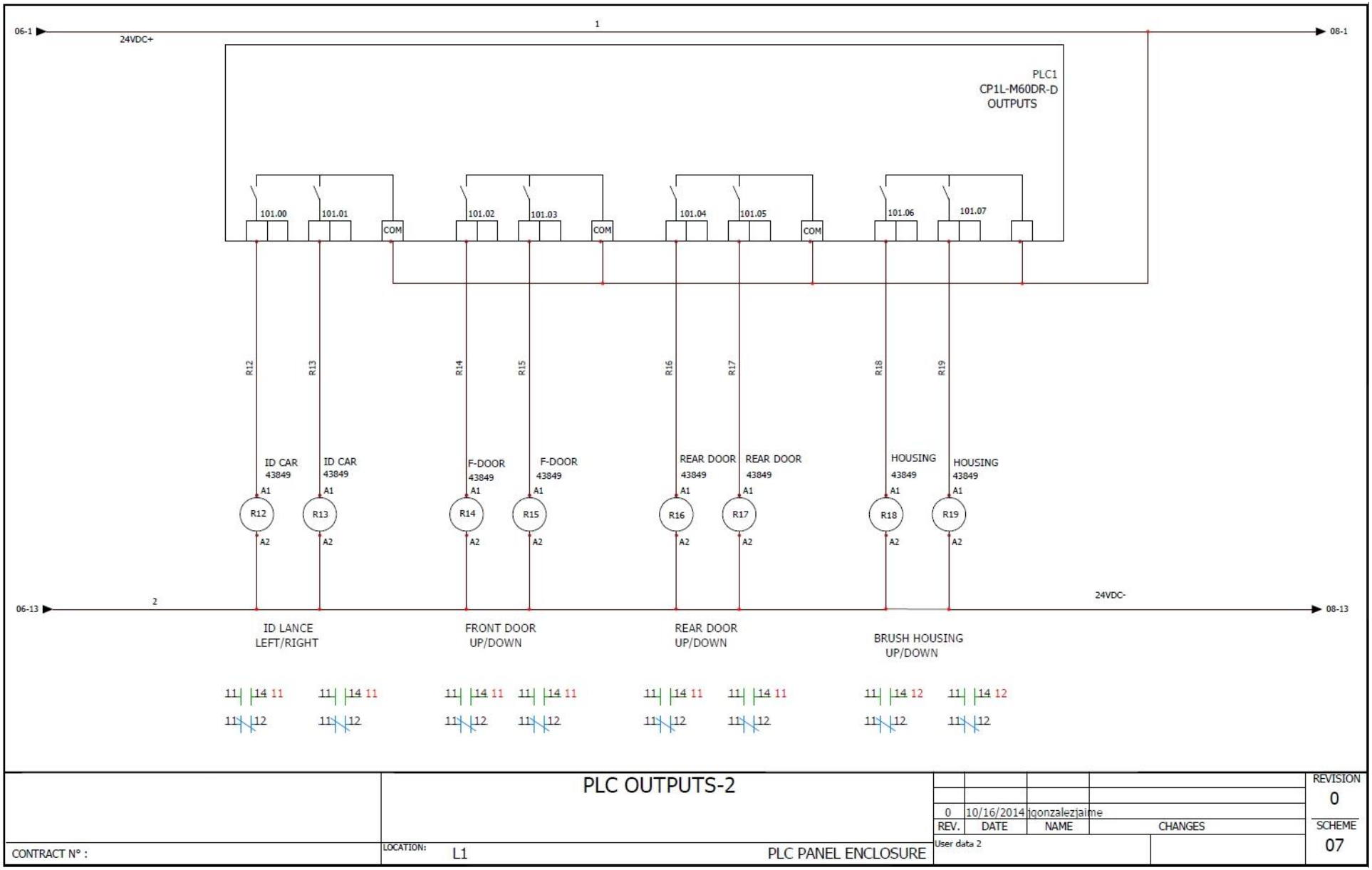

PLC Outputs 3

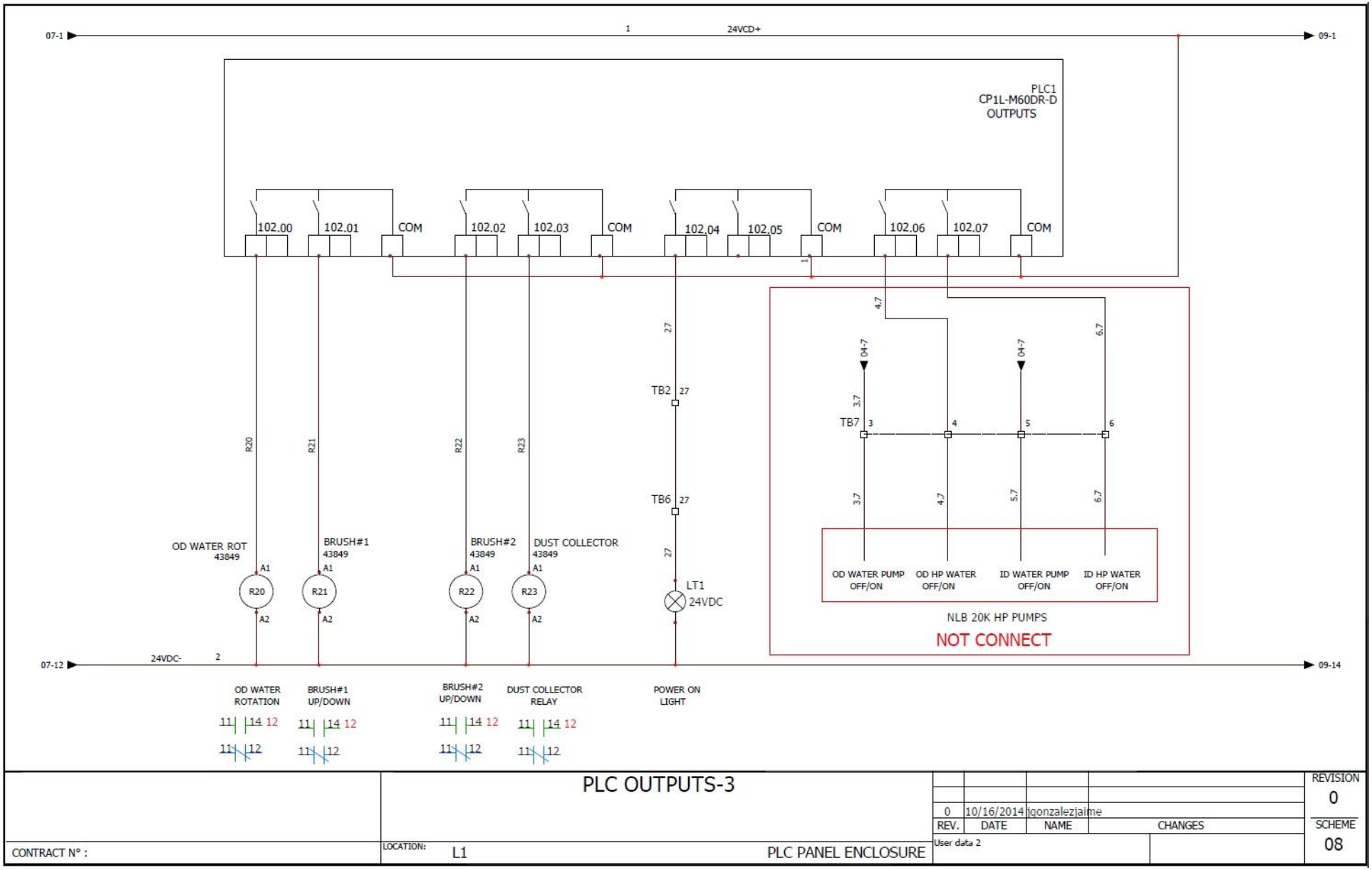

Amplifier Schematic

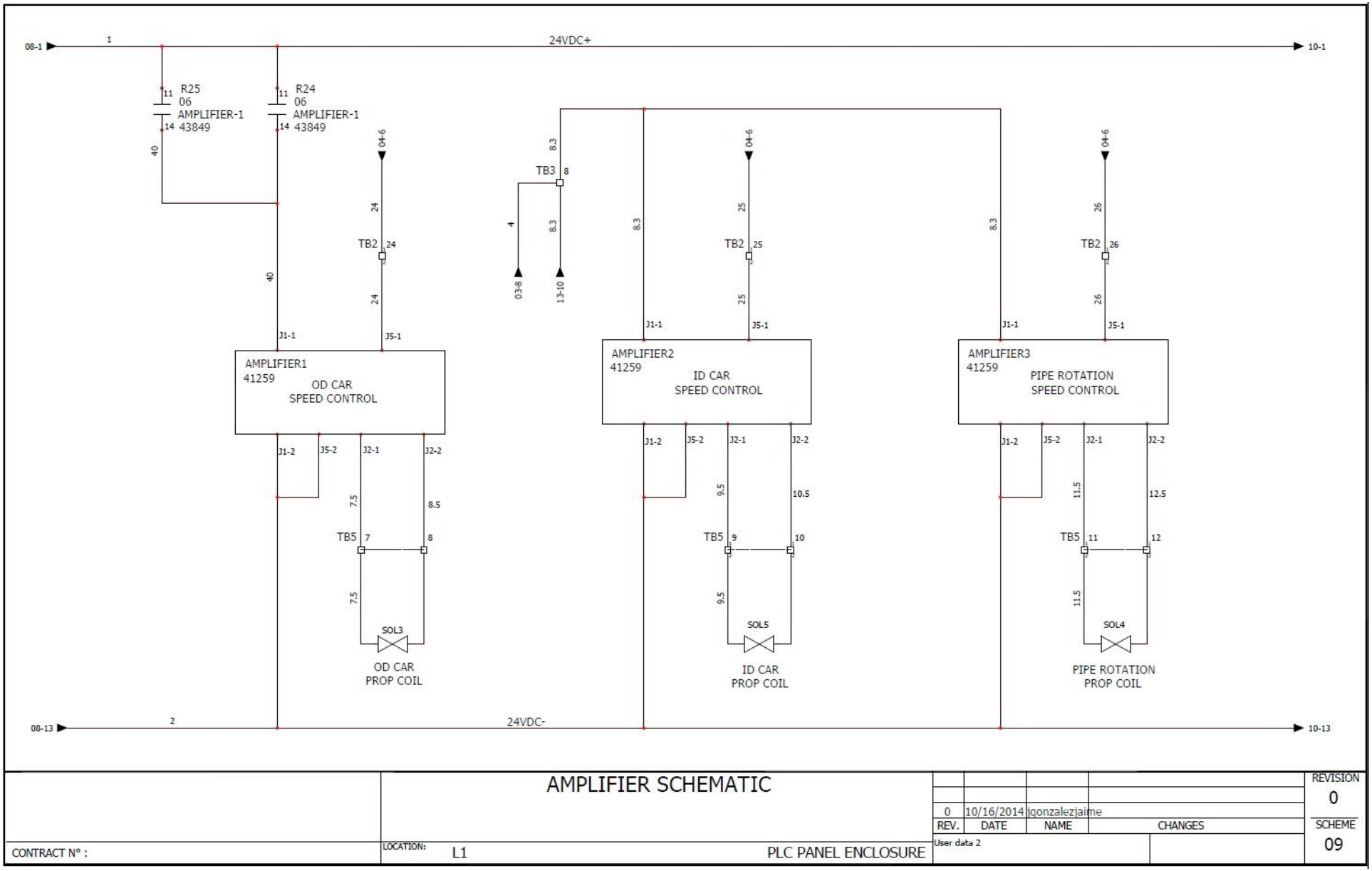
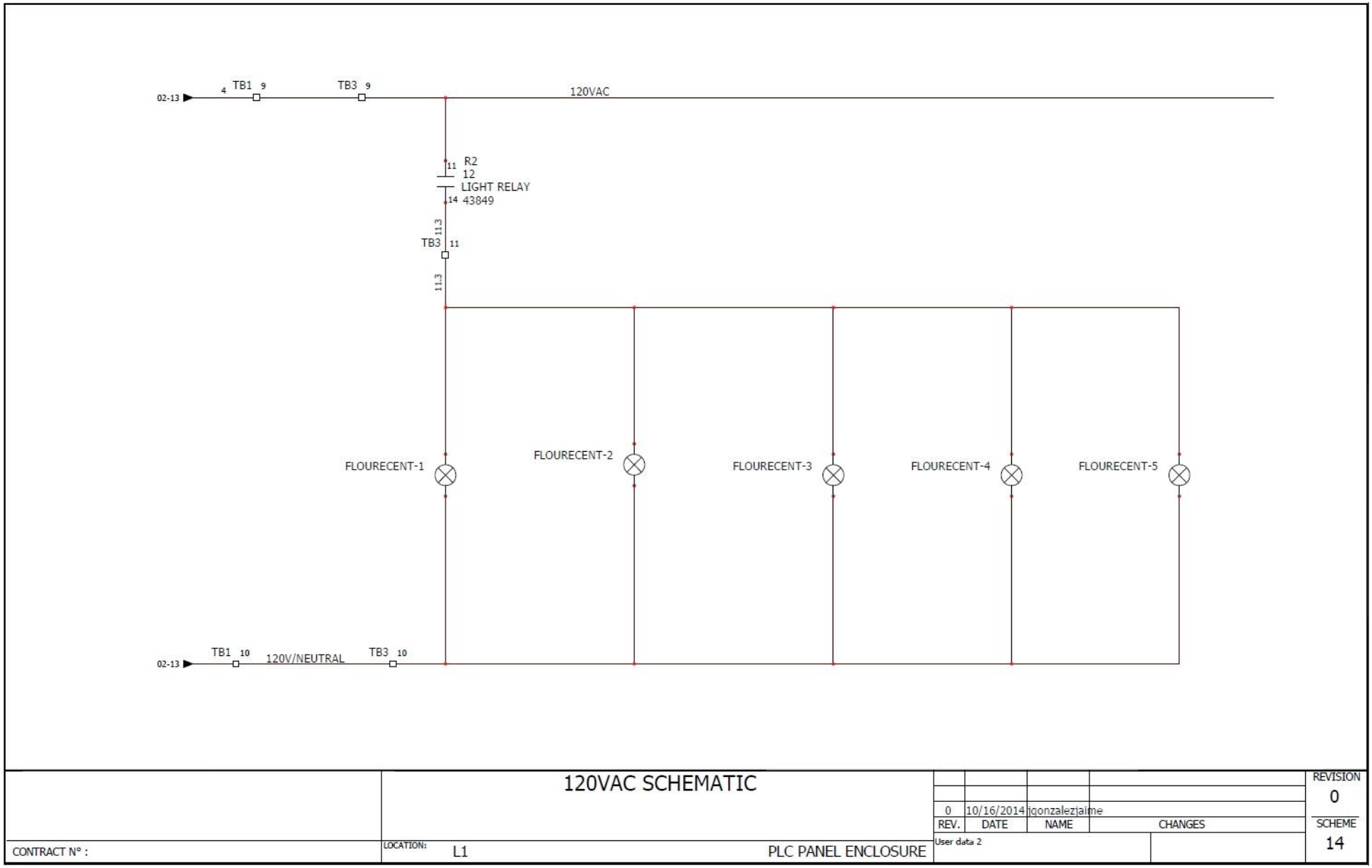
120V Schematic